16011

Call Us First!
DO NOT RETURN TO STORE.

For immediate help with assembly or product information

call our toll free number:
1-800-577-9663
or email:

customerservice@backyardproductsllc.com

Our staff is ready to provide assistance
April through October M-F 8:00 AM to 4:30 PM EST
Saturday 8:30 AM to 4:30 PM EST
November through March M - F 8:00 AM to 5:00 PM EST

(This page intentionally left blank.)

16011	10/13/2017

HEARTLAND
A Backyard Products Company

ASSEMBLY MANUAL

VALUE SERIES
STRATFORD 12' x 8' (366 x 244 cm)

ACTUAL FLOOR SIZE IS 141 x 96" (358 x 244 cm)

KEEP THIS MANUAL FOR FUTURE REFERENCE

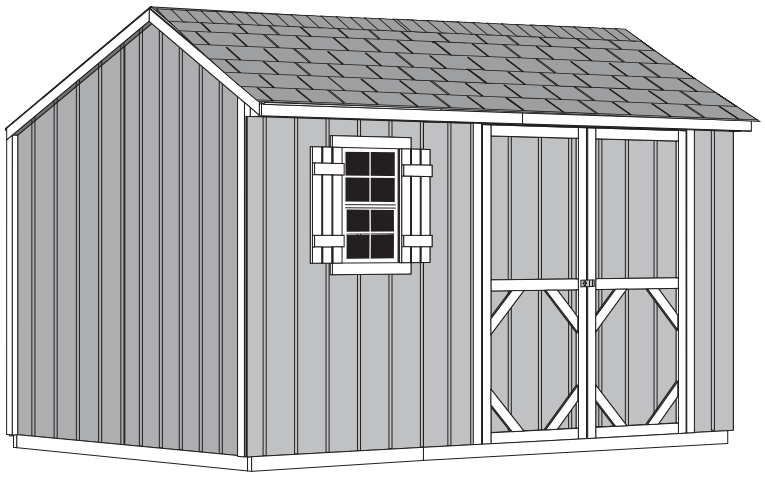

⚠ IMPORTANT! ⚠

READ INSTRUCTIONS THOROUGHLY PRIOR TO BEGINNING ASSEMBLY.

BEFORE YOU BEGIN

- **BUILDING RESTRICTIONS AND APPROVALS**

  Be sure to check local building department and homeowners association for specific restrictions and/ or requirements before building.

- **ENGINEERED DRAWINGS**

  Contact our Customer Service Team if engineered drawings are needed to pull local permits.

- **SURFACE PREPARATION**

  To ensure proper assembly you must build your shed on a level surface. Recommended methods and materials to level your shed are listed on page 8.

- **CHECK ALL PARTS**

  Inventory all parts listed on pages 4 - 6. Contact out Customer Service Team if any parts are missing or damaged.

- **ADDITIONAL MATERIALS**

  You will need additional materials to complete your shed. See page 3 for required and optional materials and quantities.

- CUSTOMER SERVICE -

Call: 1-800-577-9663 email: customerservice@backyardproductsllc.com

TOOLS

Required

- ❑ Phillips Screwdriver
- ❑ Drill / Driver
  - ❑ 3/8" Drill Bit
  - ❑ #2 Philips Drive Bit
- ❑ Hammer
- ❑ Level
- ❑ Pencil
- ❑ Tape Measure
- ❑ Square

- ❑ Utility Knife
  - ❑ Shingle Blades
- ❑ Caulk Gun
- ❑ Paint Tools
- ❑ Safety Glasses
- ❑ Hand Saw 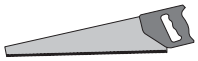
- ❑ Ladder

Optional

- ❑ Tool Belt/ Nail Pouch
- ❑ Tin Snips (for drip edge)
- ❑ Chalk Line
- ❑ Nail Gun
  - • gun nails
- ❑ Gloves

Safety! Always use approved safety glasses during assembly.

HELPFUL REMINDER SYMBOLS

Look for these symbols for helpful reminders throughout this manual.

= Assistance Required; two or more people.

= Ensure squareness.

= Important required step or operation.

= Helpful assembly hint.

= Mark part with pencil.

= Beginning of steps for assembly or installation.

= You have finished the assembly or installation.

= Level

ORIENT LUMBER AND TRIM FOR BEST APPEARANCE

Framing lumber is graded for structural strength and not appearance. Exterior trim is graded for one good side.

Always install the material leaving the best edge and best surface visible. Please remember that these blemishes in no way negatively affect the strength or integrity of our product. (See Fig. **A**, **B**, **C**.)

A

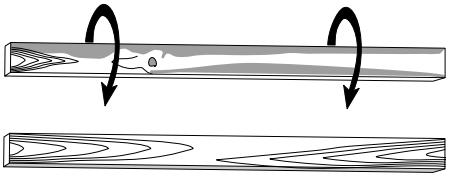

B

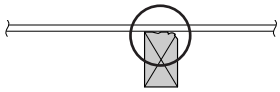

C

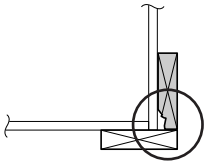

ADDITIONAL MATERIALS FOR BUILDING YOUR SHED

- ☐ **3-TAB SHINGLES ..... 5 Bundles**
- ☐ **PAINT FOR SIDING ..... 2 Gallons**
  Use 100% acrylic latex exterior paint. (2) coats recommended.
- ☐ **CAULK ..... 3 Tubes**
  Use acrylic latex exterior caulk that is paintable.
- ☐ **1" GALVANIZED ROOFING NAILS.... 2 Lbs**
  For shingles.
- ☐ **PAINT FOR TRIM ..... 1 Quart**
  Use 100% acrylic latex exterior paint.
- ☐ **WOOD GLUE ..... Exterior Rated**

FOUNDATION

- This shed kit **does not** include a wood floor frame or floor panels. See **pages 10 through 14** for suggested floor construction.
- This shed does not include ANY leveling materials.
- See the FLOOR LEVELING section on page 8 for recommended methods and suggested materials to properly level your floor, as this will vary depending on your specific site.
- See the CONCRETE FOUNDATION section on page 9 for recommended methods to build your shed on a poured concrete slab.

WOOD FLOOR FRAME (NOT INCLUDED)

Use Treated Lumber For Floor Framing

MATERIAL LIST:

- ☐ **x10** 2 x 4 x 96" (5 x 10 x 243,8 cm) Treated Lumber
- ☐ **x2** 2 x 4 x 144" (5 x 10 x 365,7 cm) Treated Lumber

CUT LIST:

- ☐ **x10** 2 x 4 x 93" (5 x 10 x 236,2 cm)
- ☐ **x2** 2 x 4 x 141" (5 x 10 x 358,1 cm)

- ☐ **x40** 10D 3” (7,6 cm) Hot Dipped Galvanized Nails

FLOOR PANELS (NOT INCLUDED)

MATERIAL LIST:

- ☐ **x3** 5/8 x 48 x 96” (1,6 x 122 x 243,8 cm) OSB Panels
  (Recommend 5/8” (1,6 cm) (minimum) thick OSB panels)

CUT LIST:

- ☐ **x1** 5/8 x 45 x 96" (1,6 x 1114 x 243,8 cm)

- ☐ **x186** 6D 2” (5,0 cm) Hot Dipped Galvanized Nails

REINFORCED WOOD FLOOR FRAME (OPTIONAL)

IMPORTANT!
Depending on your specific use, you may want to construct a heavy duty floor frame by adding additional floor joists. Below is a list in addition to the framing materials above (not included):

- ☐ **x3** 2 x 4 x 96" (5 x 10 x 244 cm) Treated Lumber
  Cut to (3) 2 x 4 x 93" (5 x 10 x 236,2 cm)
- ☐ **x12** ea. 3" (7,6 cm) Hot Dipped Galvanized Nails

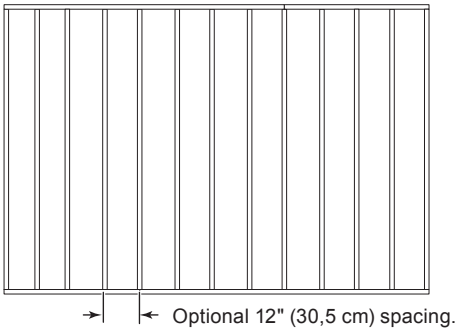

OPTIONAL MATERIALS

- ☐ **DRIP EDGE ..... 40 Feet**
- ☐ **#15 ROOFING FELT**
  To cover 114 Sq. Ft. of roof area.
- ☐ **1" GALVANIZED ROOFING NAILS.....1/4 Lb**
  For roofing felt.

REFER TO THE BACK OF THIS MANUAL AND THE MANUFACTURER’S INSTRUCTIONS FOR INSTALLATION OF SHINGLES, DRIP EDGE AND FELT.

PARTS IDENTIFICATION AND SIZES

Part identification letters are stamped on some parts.

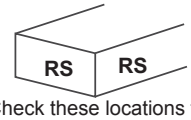

Check these locations for part stamp.

WOOD SIZE CONVERSION CHART

Nominal Board Size	Actual Size
2" x 4"	1-1/2" x 3-1/2" (3,8 x 8,9 cm)
1" x 4"	3/4" x 3-1/2" (1,9 x 8,9 cm)
2" x 3"	1-1/2" x 2-1/2" (3,8 x 6,3 cm)
1" x 3"	3/4" x 2-1/2" (3,8 x 6,3 cm)

PARTS LIST

INVENTORY YOUR PARTS before you begin.
We suggest sorting parts by the category they are listed in.

WALLS

- ☐ x1 **FL** 2 x 3 x 14-1/2" (5 x 7,6 x 36,8 cm)
- ☐ x1 **FN** 2 x 3 x 62-1/2" (5 x 7,6 x 158,8 cm)
- ☐ x5 **FZ** 2 x 3 x 66-1/2" (5 x 7,6 x 169 cm)
- ☐ x2 **DY** 2 x 3 x 7-7/8" (5 x 7,6 x 20 cm)
- ☐ x1 **KK** 2 x 3 x 24-1/16" (5 x 7,6 x 61 cm)
- ☐ x1 **BJ** 2 x 3 x 29-1/2" (5 x 10 x 75 cm)
- ☐ x3 **KZ** 2 x 3 x 32-1/2" (5 x 10 x 83 cm)
- ☐ x2 **LF** 2 x 3 x 21-1/2" (5 x 7,6 x 55)
- ☐ x2 **LV** 2 x 3 x 22-1/2" (5 x 7,6 x 57 cm)
- ☐ x3 **NF** 2 x 3 x 46-1/2" (5 x 7,6 x 118 cm)
- ☐ x5 **OT** 2 x 3 x 68" (5 x 7,6 x 173 cm)
- ☐ x3 **PR** 2 x 3 x 94-1/2" (5 x 7,6 x 240 cm)
- ☐ x6 **PT** 2 x 3 x 96" (5 x 7,6 x 244 cm)
- ☐ x7 **RK** 2 x 3 x 13" (5 x 7,6 x 33 cm)

☐ x1 **GAA** 1 x 3 x 5" (2,5 x 7,6 x 12,7 cm) Gauge Block for 3/4" (19 mm) measurement

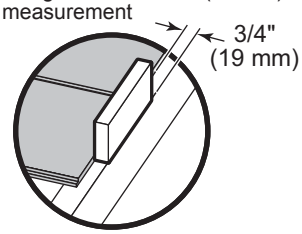

RAFTERS

- ☐ x10 8 x 24" (20 x 61 cm) Gusset
- ☐ x5 **AD** 2 x 4 x 65-5/8" (5 x 10 x 167 cm) Rafter
- ☐ x5 **NU** 2 x 4 x 46-13/16" (5 x 10 x 119 cm) Rafter

TRIM

- ☐ x6 **KW** 5/8 x 3 x 25" (1,6 x 7,6 x 63,5 cm)
- ☐ x4 **KV** 5/8 x 3 x 8" (1,6 x 7,6 x 20 cm)
- ☐ x2 **KX** 5/8 x 3 x 21-3/4" (1,6 x 7,6 x 55 cm)
- ☐ x2 **KY** 3/4 x 2-1/2 x 72-3/8" (1,9 x 6,3 x 184 cm)
- ☐ x8 **ZZ** 5/8 x 3 x 14" (1,6 x 7,6 x 35,5 cm)
- ☐ x2 **MM** 2 x 3 x 76-1/4" (5 x 7,6 x 194 cm)
- ☐ x2 **NO** 2 x 3 x 70-1/2" (5 x 7,6 x 179 cm)
- ☐ x2 **NQ** 2 x 3 x 46-7/8" (5 x 7 x 119 cm)
- ☐ x2 **NR** 2 x 3 x 65" (5 x 7,6 x 165 cm)
- ☐ x2 3/8 x 5-3/8 x 5-1/2" (1 x 13,6 x 14 cm) 1 Left / 1 Right

WALL PANELS / DOOR PARTS LIST

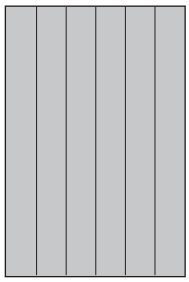

☐ **x3**

3/8 x 48 x 72"
(1 x 122 x 183 cm)

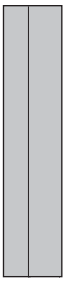

☐ **x2**

3/8 x 15-7/8 x 72"
(1 x 40 x 183 cm)

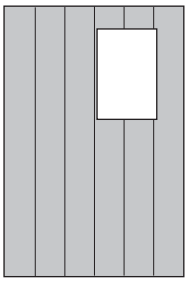

☐ **x1**

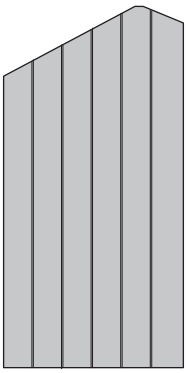

☐ **x1**

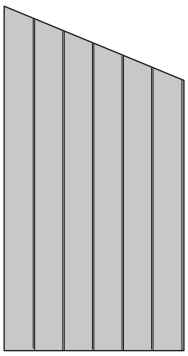

☐ **x1**

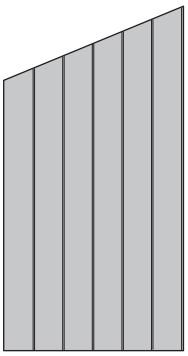

☐ **x1**

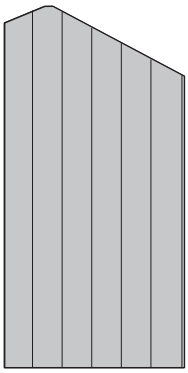

☐ **x1**

☐ **x1**

3/8 x 7-7/8 x 94-1/2"
(0,9 x 20 x 240 cm)

☐ **x1**

3/8 x 7-7/8 x 46-1/2"
(0,9 x 20 x 118 cm)

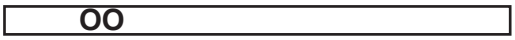

☐ **x1**

1-1/2 x 2-1/2 x 69" (3,8 x 6,3 x 175,3 cm)

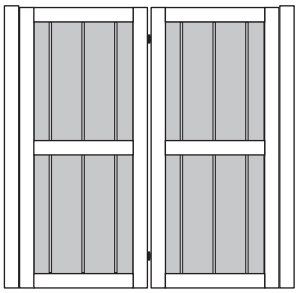

☐ **x1** Left Door

☐ **x1** Right Door

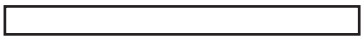

☐ **x2**

1-1/2 x 2-1/2 x 69" (3,8 x 6,3 x 175,3 cm)

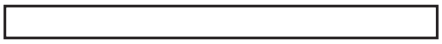

☐ **x1**

5/8 x 3-7/8 x 96" (1,6 x 9,8 x 244 cm)

ROOF PANELS

Roof P anels are
7/16" (11 mm) thick

☐ **x2**

7/16 x 48 x 96"
(1,1 x 122 x 244 cm)

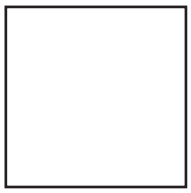

☐ **x2**

7/16 x 47-7/8 x 48"
(1,1 x 122 x 122 cm)

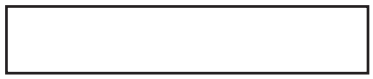

☐ **x1**

7/16 x 18 x 96”
(1,1 x 46 x 244 cm)

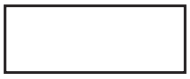

☐ **x1**

7/16 x 18 x 48”
(1,1 x 46 x 122 cm)

NOTES

SHELF & WINDOW PARTS LIST

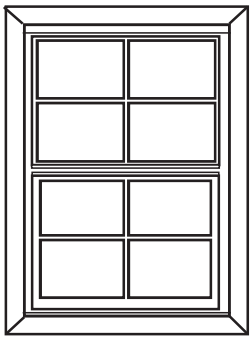

☐ **x1**
Window

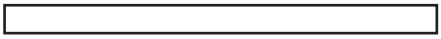

☐ **x1**
1 x 3 x 96"
(2,5 x 7,6 x 244 cm)

☐ **x1**
7/16 x 20 x 96"
(1,1 x 51 x 244 cm)

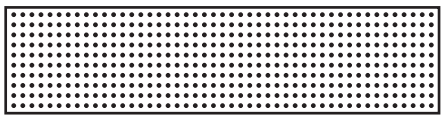

☐ **x1**
23-7/8 x 96"
(61 x 244 cm) Peg Board

☐ **x2**
7/16 x 11-3/4 x 96"
(1,1 x 30 x 244 cm)

NAIL BOXES (Shown actual size)

☐ **x2 Boxes**

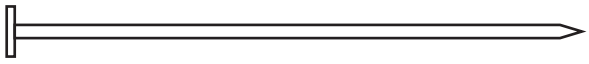

3" (7,6 cm)

☐ **x4 Boxes**

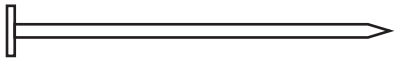

2" (5,0 cm)

FASTENERS / HARDWARE BAG (Shown actual size)

☐ **x112**

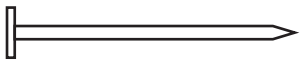

1-1/2" (3,8 cm)

☐ **x36**

2" (5,0 cm)

☐ **x74**

3" (7,6 cm)

☐ **x30**

2" (5,0 cm)

☐ **x112**

1-1/4" (3,2 cm)

☐ **x25**

1" (2,5 cm)

☐ **x75**

3/4" (19 mm)

DOOR HARDWARE (Not actual size)

☐ **x2**

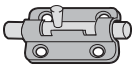

☐ **x1**

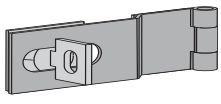

☐ **x1**

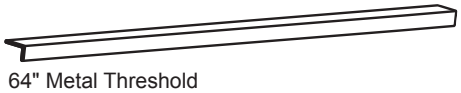

64" Metal Threshold

☐ **x8**

3/4" (19 mm)

☐ **x7**

3/4" (19 mm)

☐ **x11**

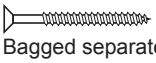

3/4" (19 mm)
Bagged separately / special coating

BUILDING ANATOMY

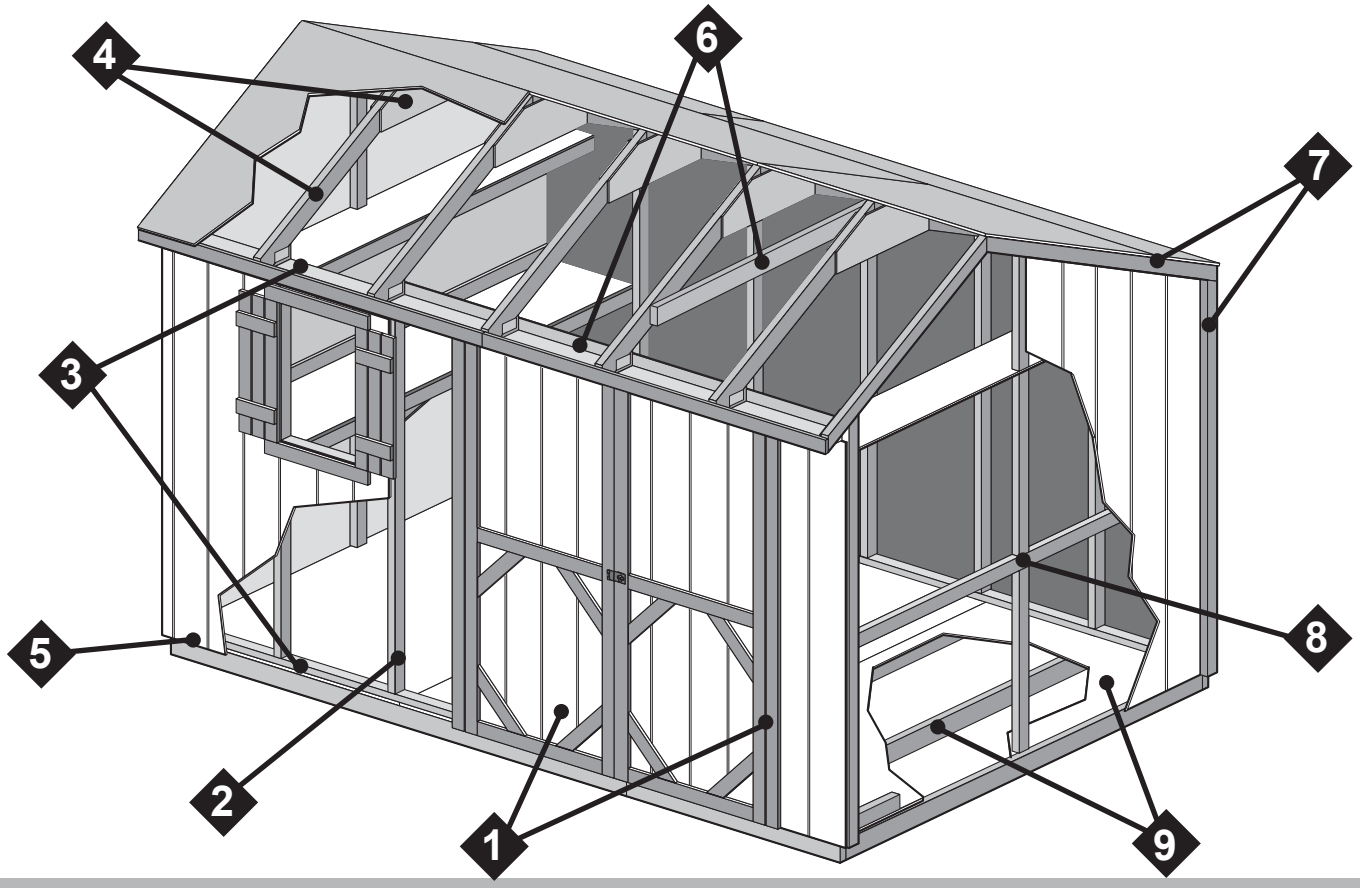

This building has been designed using our patented EZ Frame construction method. EZ Frame is a unique construction method which has been engineered to use fewer framing members. This reduces assembly time and cost by as much as 30% compared to conventional construction methods. **EZ Frame patent no. 5,666,766**

All of our buildings have been engineered to withstand demanding wind and snow loads. If you live in an area with extreme wind/snow load requirement, contact us and we can assist with engineering to meet your local codes.

---

1. **Sub-assembled doors with attached hinges.**
2. **2x3 wall studs have been engineered to support roof load and to meet demanding wind loads.**
3. **Sidewall top and bottom plates tie wall studs together and provide nailing support for top and bottom edge of siding.**
4. **Rafters line up over wall studs to effectively transfer roof load to the floor and eliminate need for double top plate. Oversized wood gussets at peak provide a strong connection for rafter halves.**
5. **Treated siding overhangs the wall framing and floor to keep the elements out.**
6. **Collar tie and over-door header maintains door frame integrity.**
7. **Corner studs & end rafters are positioned to the outside of the siding where they serve the dual purpose of framing and trim.**
8. **The EZ Frame design transfers the roof load to the front and back walls allowing for reduced framing at the side walls.**
9. **Treated floor frame and Oriented Strand Board (OSB) floor (not included).**

FLOOR LEVELING OPTIONS

There are multiple ways to level your floor frame. Our recommended leveling method is shown below.
Leveling materials are not included in this kit.

PREFERRED METHOD - 4x4 TREATED RUNNERS (NOT INCLUDED)

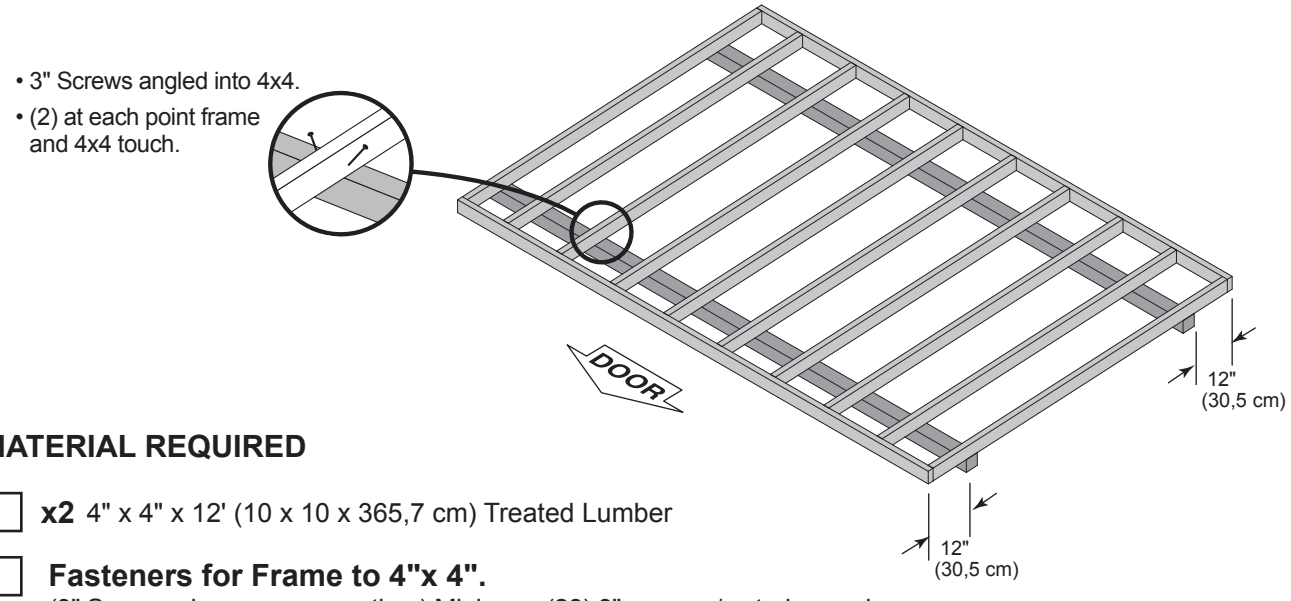

MATERIAL REQUIRED

☐ **x2** 4" x 4" x 12' (10 x 10 x 365,7 cm) Treated Lumber

☐ **Fasteners for Frame to 4"x 4".**
(3" Screws shown as one option.) Minimum (28) 3" screws / exterior grade.

⚠ **Use only wood treated for ground contact and fasteners approved for use with treated wood.**

⚠ **Always support frame seams.**

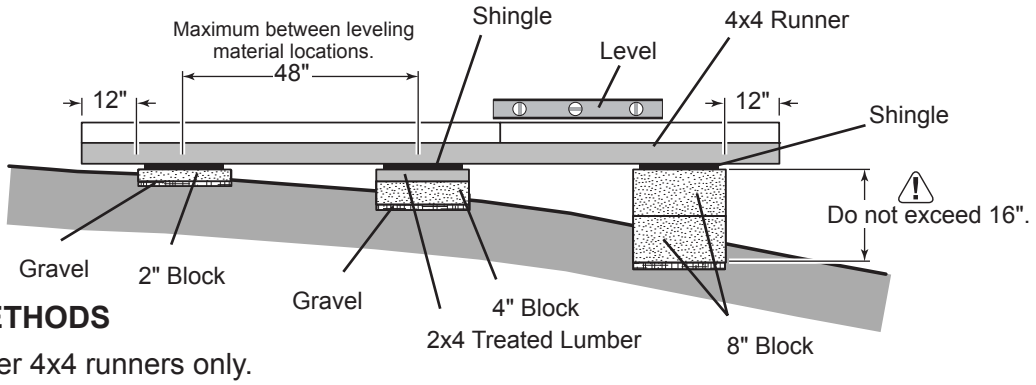

LEVELING METHODS

- Level under 4x4 runners only.
- Locate leveling material 12" from ends of runners and no more than 48" apart.
- Asphalt shingles should be used between 4x4 runners and blocks or treated lumber. Never use shingles in direct contact with ground.
- For best results and aiding in water drainage use gravel under each concrete block.

LEVELING MATERIALS

☐ Gravel

☐ Solid Masonry Blocks in 1", 2", 4" or 8" thickness

☐ 2x4 Treated Lumber

☐ Asphalt Shingles

⚠ **Leveling higher than 16" not recommended.**

CONCRETE

- If you are building your shed on a concrete foundation see the following page.

CONCRETE FOUNDATION

If you choose to install your kit on a concrete slab refer to the diagram below.

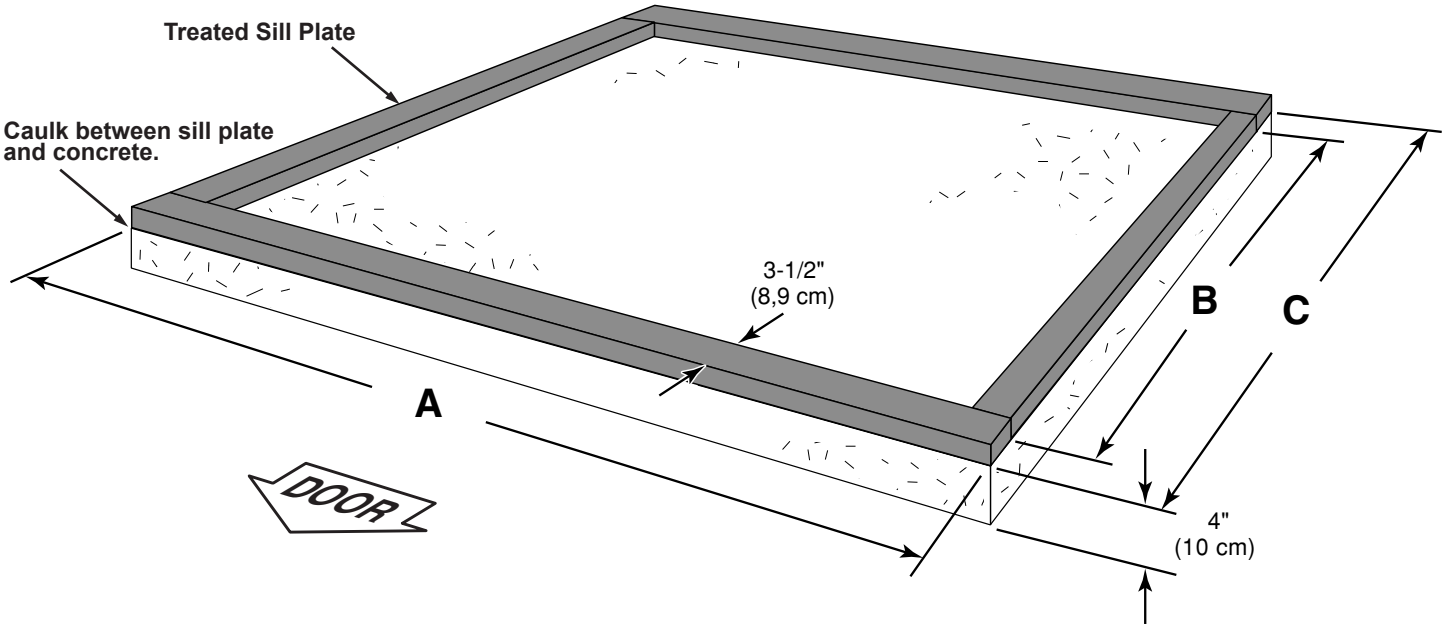

Building Size	Actual Size	A	B	C
12'x 8' (366 x 244 cm)	141" x 96" (358 x 244 cm)	141" (358 cm)	89" (226 cm)	96" (244 cm)

Requires:

- ☐ **x2** 2" x 4" x 12' (5 x 10 x 366 cm) ⚠ **MUST be treated lumber.**
- ☐ **x2** 2" x 4" x 8' (5 x 10 x 244 cm) ⚠ **MUST be treated lumber.**
- ☐ **x2** Caulk

⚠ Allow new concrete slabs to cure for at least seven (7) days.

- A treated 2 x 4" (5 x 10 cm) sill plate is required when installing your shed on concrete. **Hint: Purchase full length treated lumber.**
- Use a high quality exterior grade caulk beneath all sill plates.
- Fasten 2 x 4" (5 x 10 cm) sill plates to slab using approved concrete anchors **(fasteners not included)**.
- Check local code for concrete foundation requirements.

NOTES

FLOOR FRAME (NOT INCLUDED)

PARTS REQUIRED:

x10 TREATED
2 x 4 x 93" (5 x 10 x 236 cm)

x2 TREATED
2 x 4 x 141" (5 x 10 x 358 cm)

x40
3" (7,6 cm)

Use Treated lumber

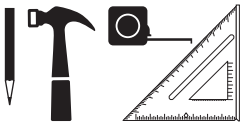

BEGIN

1. Orient parts as shown on flat surface. Measure and mark.

2. Use two 3" nails at each mark.

FINISH

3. You have finished your Floor Frame.

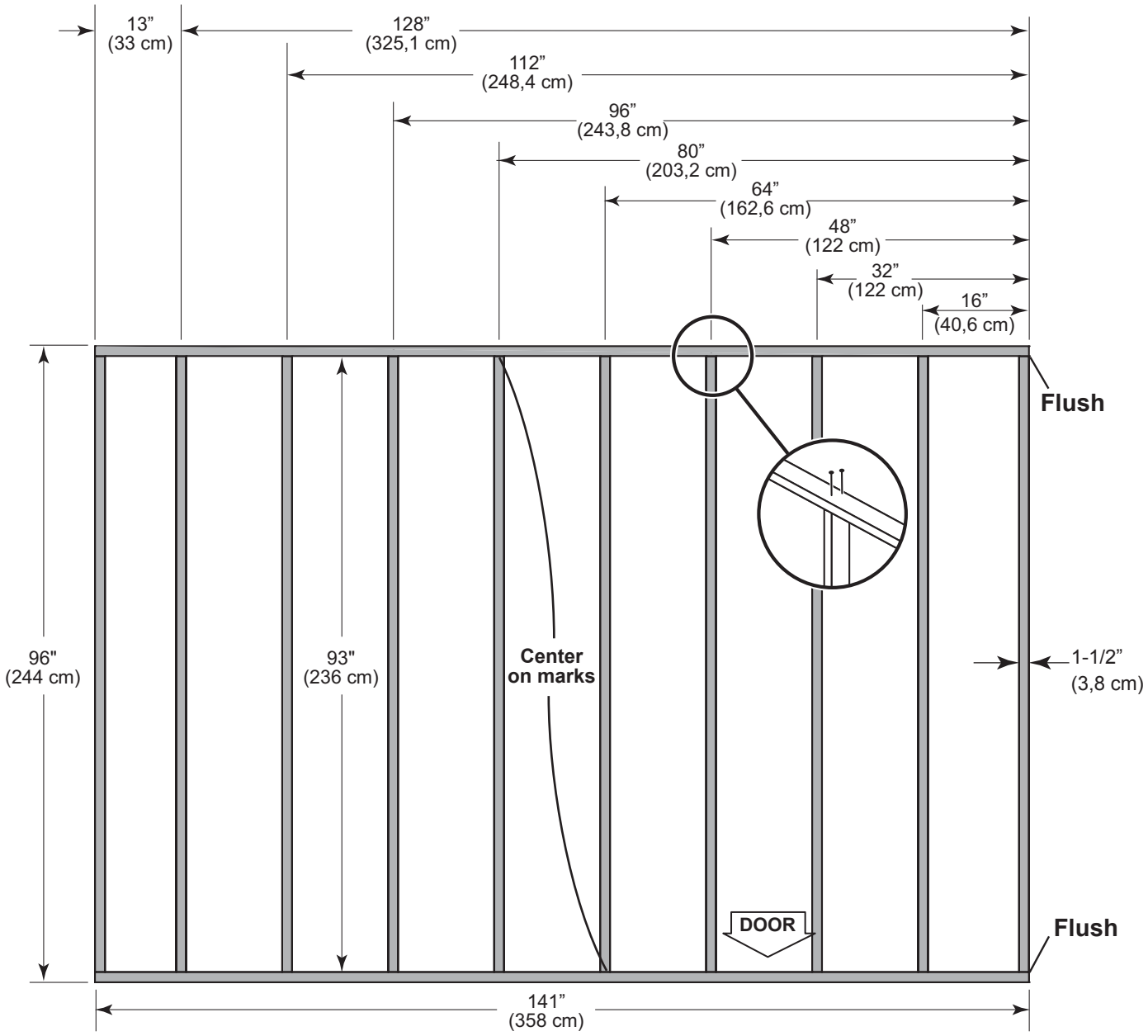

⚠ *LEVEL AND SQUARE FLOOR FRAME* ⚠

STOP! STOP!

Before attaching floor decking, it is important to level and square the floor frame.
A level and square floor frame is required to correctly construct your shed.

BEGIN

1. ⚠ See page 8 for the preferred floor leveling method.
2. Use level and check the frame is level before applying floor panels.
3. Check for frame squareness by measuring diagonally across corners. If the measurements are the same, the frame is square. The diagonal measurement will be approximately 170-9/16" (433,3 cm).
4. When the frame is level and square secure one side of frame to the 4x4 runners using one fastener at ends of each runner. Move to the opposite end of the frame. Secure the frame to 4x4 runners with one fastener at ends of each runner making sure the frame remains square **(Fig. A)**.

FINISH

5. Once the floor frame is level and square fasten the frame to the x4 runners at each point the frame contacts the 4x4 runners.

Fig. A

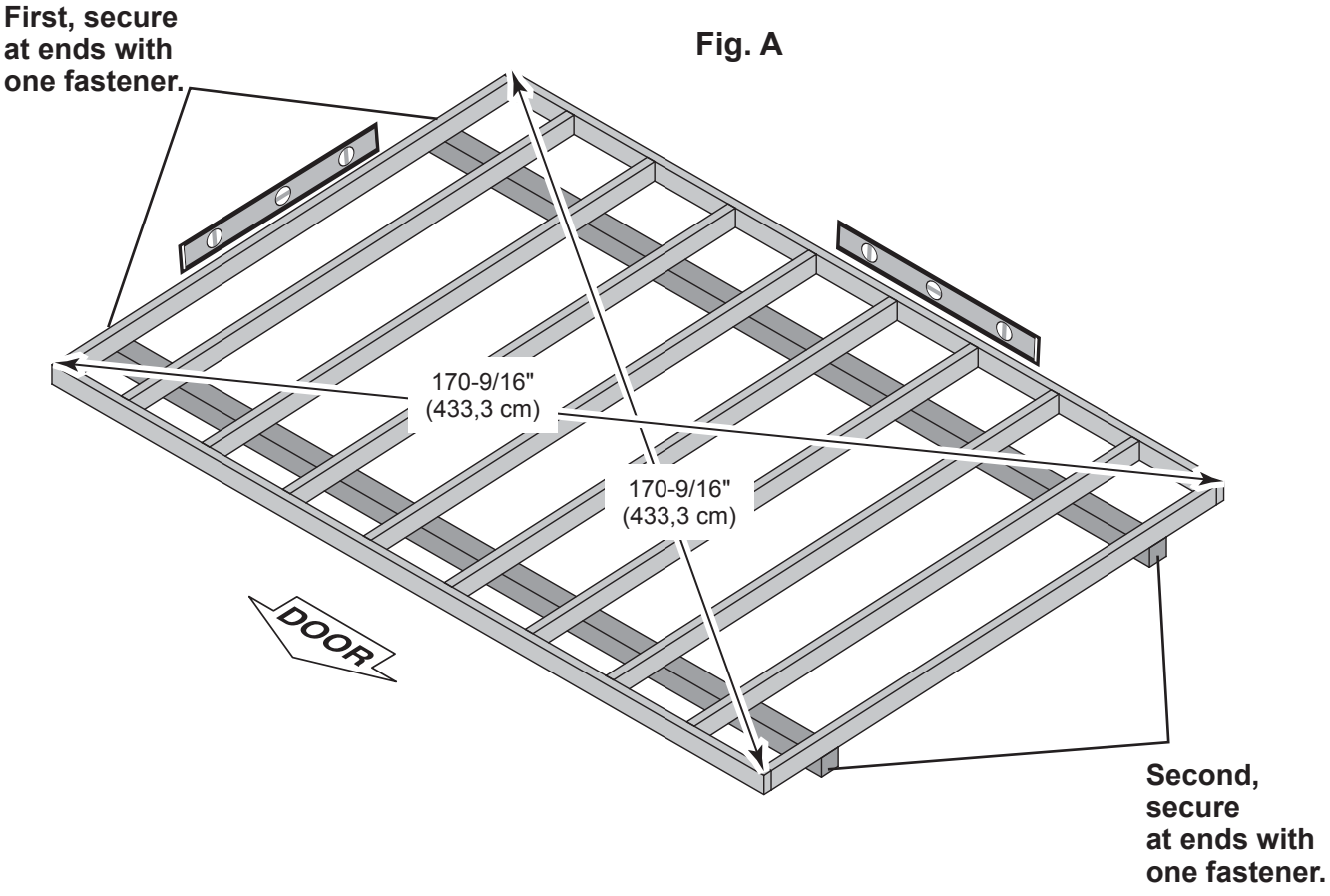

FLOOR PANELS (NOT INCLUDED)

PARTS REQUIRED:

x1 5/8 x 45 x 96" (1,6 x 114 x 243,8 cm)

Floor panels not included. See page 3 for panel sizes and quantities.

x62 2" (5,1 cm)

Ensure your floor frame is square by installing one panel and squaring frame.

BEGIN

1. Attach the 5/8 x 45 x 96" panel with the rough side up (painted-grid lines side) with the 45" edge and corner flush to the floor frame **(Fig A)**. Secure panel with two 2" nails in the corners.

2. Move to the opposite side. Using the long edge of the panel as a lever, move the panel side-to-side until the top corner is flush to the floor frame **(Fig. B)**. Secure panel with two 2" nails in the corners.

3. Check the floor frame is square by measuring diagonally across the frame corners. If the measurements are the same your floor frame is square. The measurement will be approximately 170-9/16" (433,3 cm) **(Fig. C)**.

4. Continue attaching the panel using 2" nails 6" apart on edges and 12" apart inside panel. Use a chalk line or use pre-painted grid lines to nail into joists under panel.

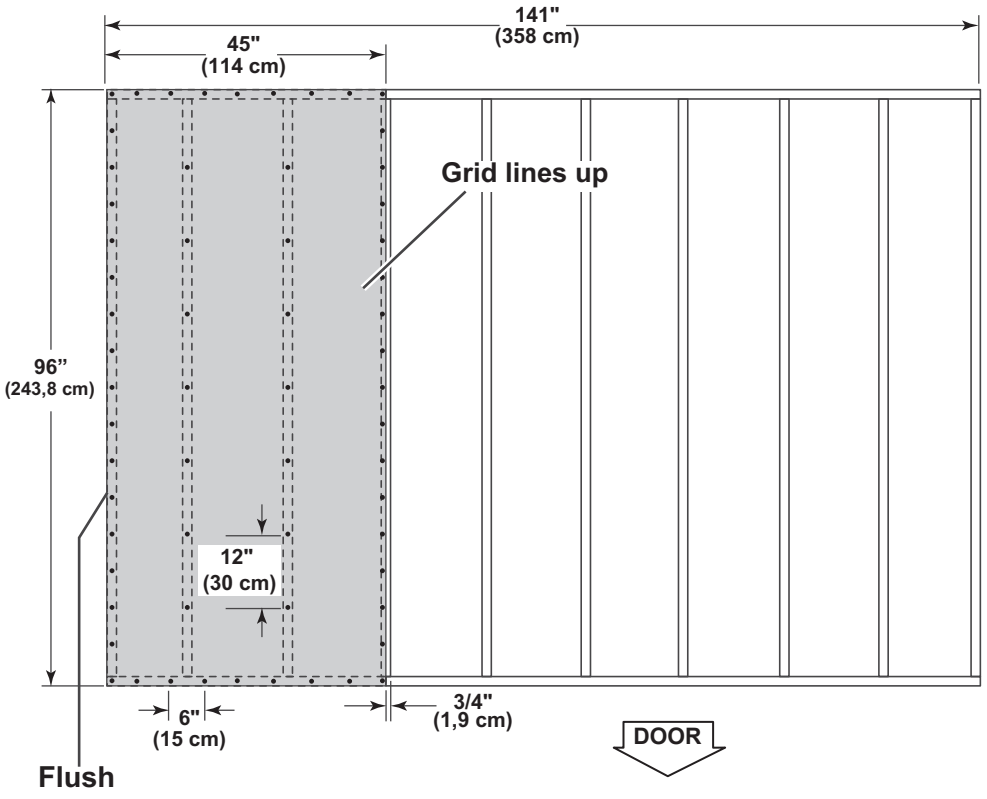

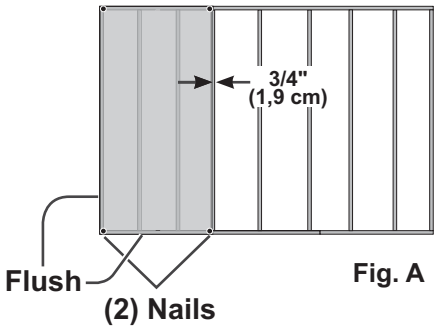

Fig. A

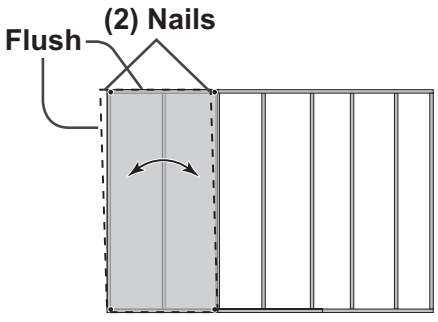

Fig. B

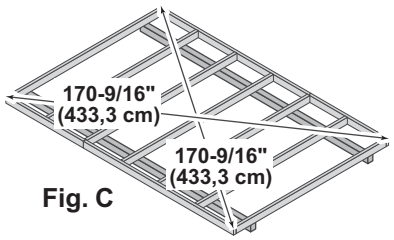

Fig. C

FLOOR PANELS (NOT INCLUDED)

PARTS REQUIRED:

x2 5/8 x 48 x 96" (1,6 x 121,9 x 243,8 cm)

x124 2" (5,1 cm)

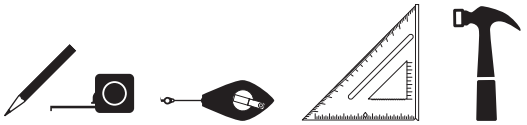

5 Continue installing panels with rough side up (painted grid lines).
Use grid lines on panel for 2" nails 6" apart on edges, and 12" apart inside panels.

FINISH

6 You have finished attaching your floor panels.

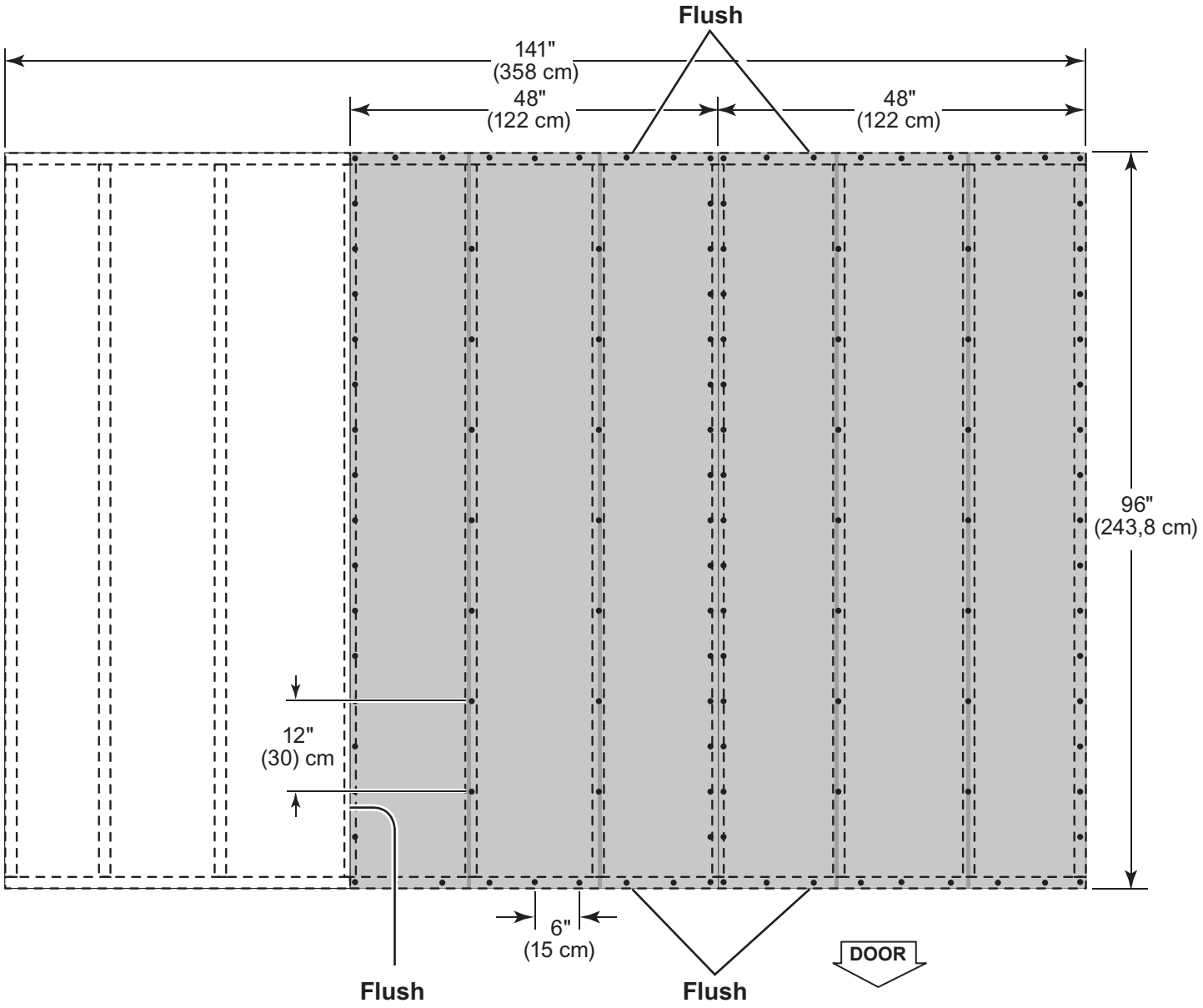

IMPORTANT!

STOP!

Check the floor frame is level after installing floor panels. Re-level if needed.

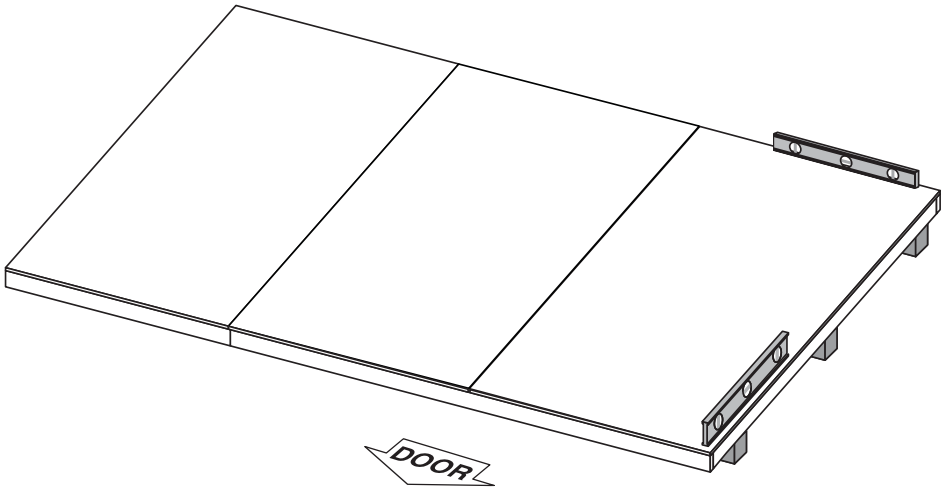

HINT:

- **The floor should be used as a stable work surface for wall construction.**
- **Organize your assembly procedure during the build process to avoid over-handling of the walls.**

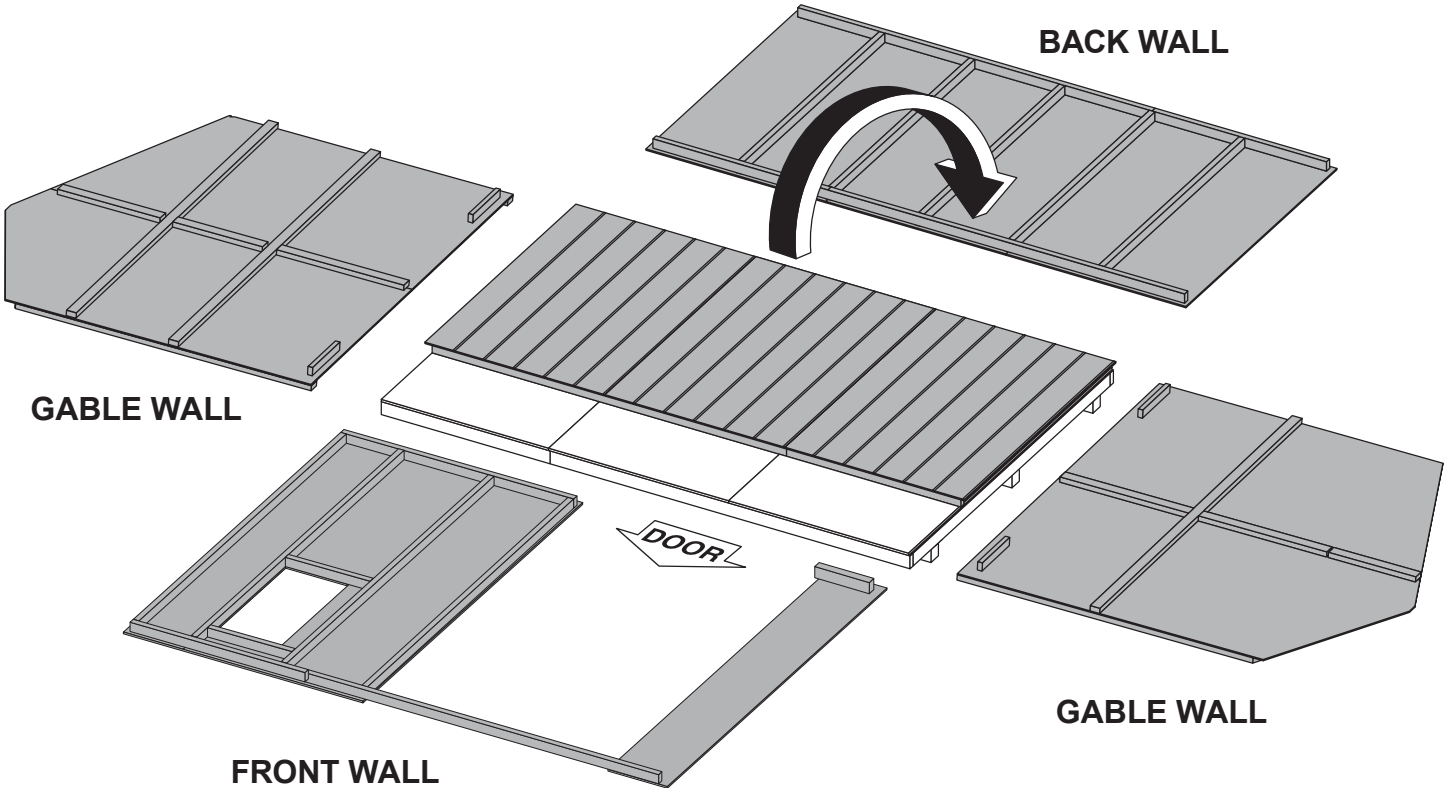

LEFT WALL

PARTS REQUIRED:

x13 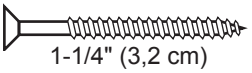

x1

x1 MM

2 x 3 x 76-1/4" (5 x 7,6 x 194 cm)

BEGIN

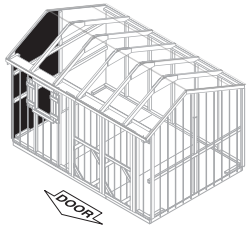

1. Orient parts on the flat on floor as shown **(Fig. A,B)**.

   Panel should be primed side down **(Fig. B)**.

2. Edges of panel should be flush to **MM.**

3. Use 1-1/4" (3,2 cm) screws spaced 6" (15 cm) apart as shown.

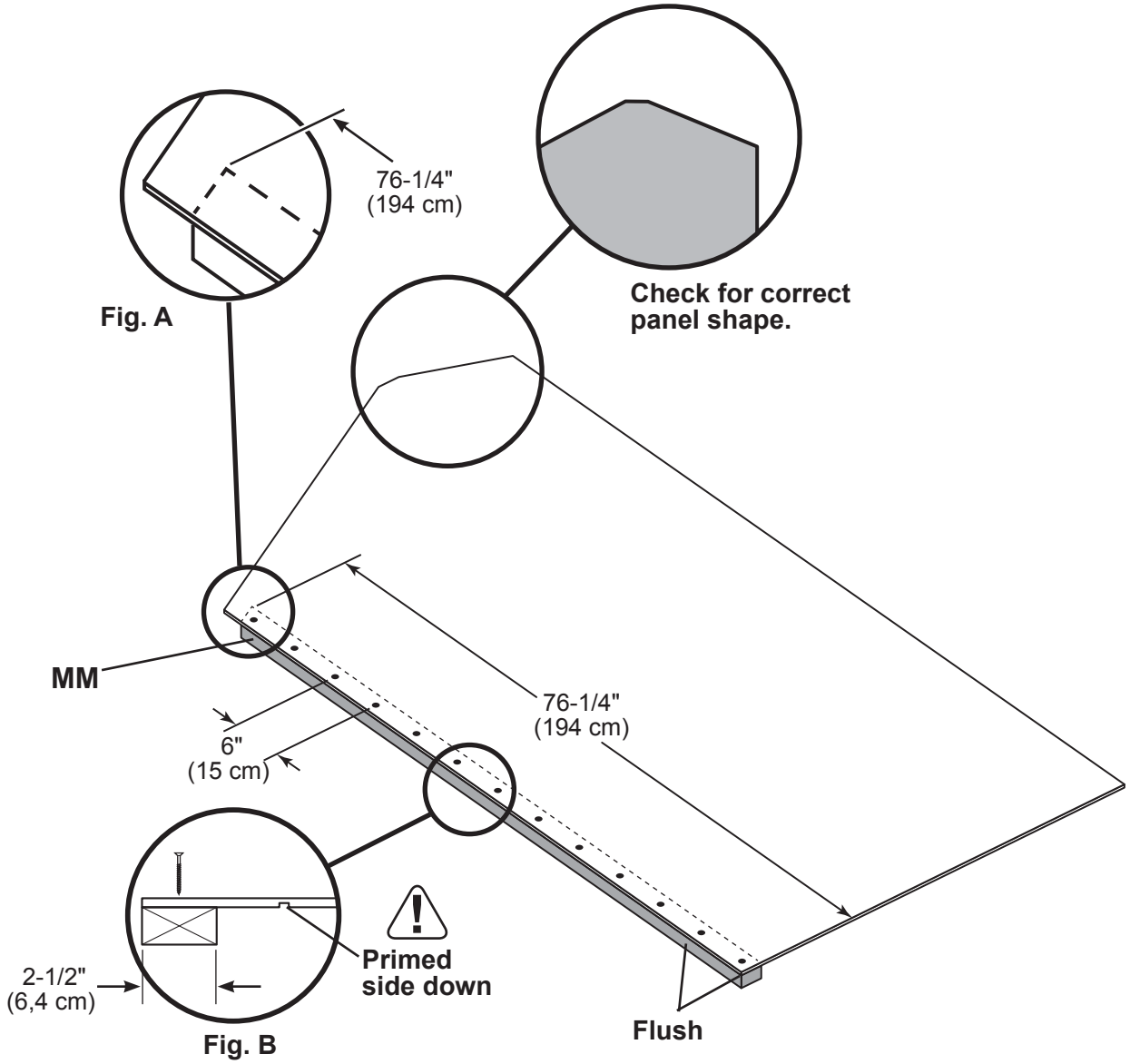

LEFT WALL

PARTS REQUIRED:

x1

x12

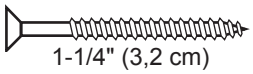

1-1/4" (3,2 cm)

x1 **NO**

2 x 3 x 70-1/2" (5 x 7,6 x 179 cm)

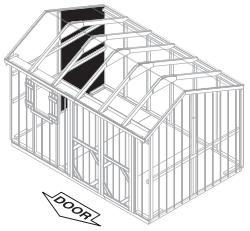

4 Orient parts on the flat on floor as shown **(Fig. A, B)**.

⚠ Panel should be primed side down **(Fig. B)**.

5 Edges of panel should be flush to **NO.**

6 Use 1-1/4" (3,2 cm) screws spaced 6" (15 cm) apart as shown.

FINISH

7 You have finished building your two Left Wall Assemblies.

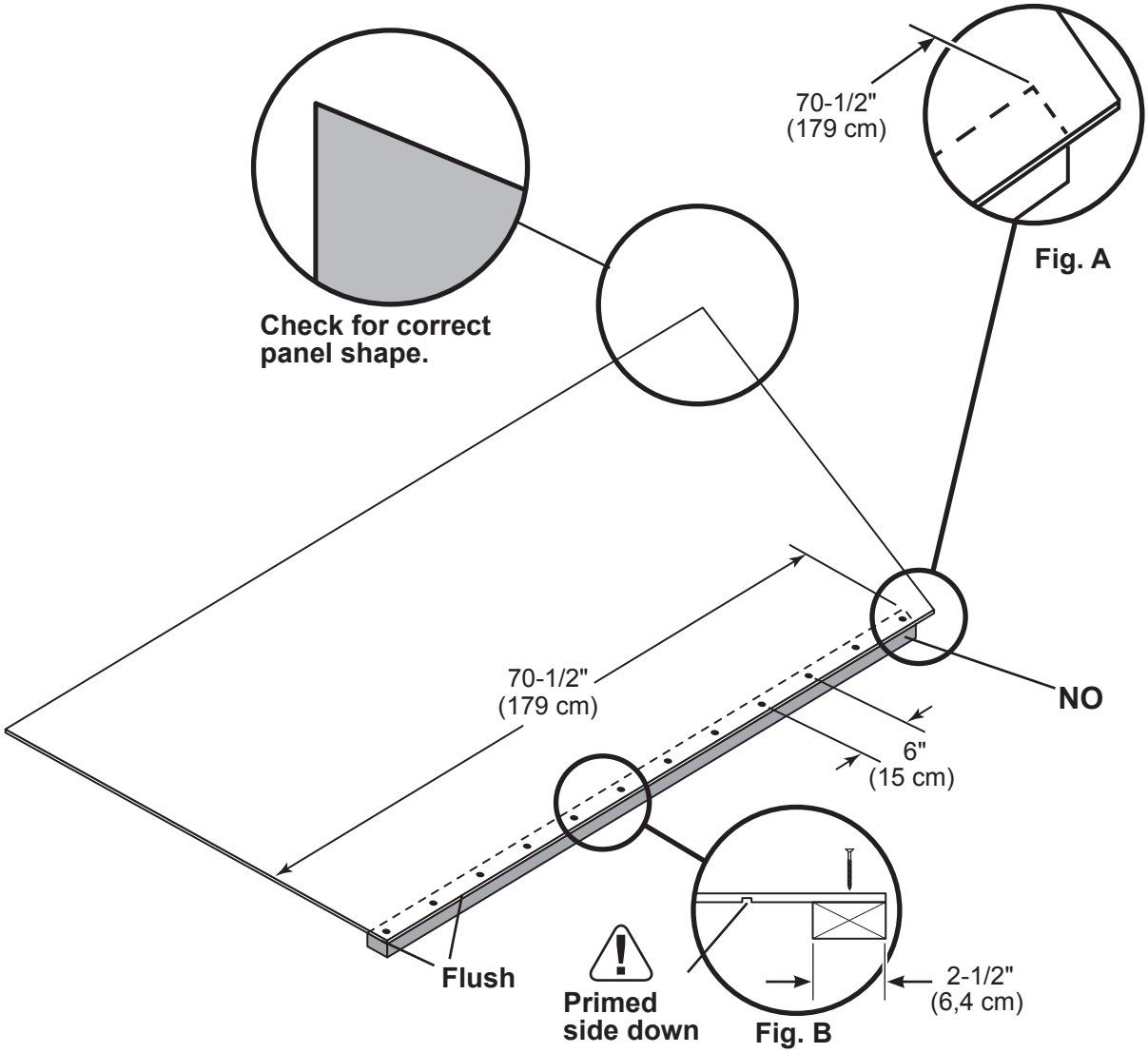

LEFT WALL

PARTS REQUIRED:

x12 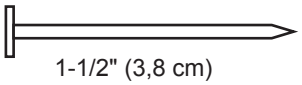
1-1/2" (3,8 cm)

x1
LEFT WALL REAR ASSEMBLY

x1	RK	2 x 3 x 13" (5 x 7,6 x 33 cm)
x1	KZ	2 x 3 x 32-1/2" (5 x 10 x 83 cm)
x2	PT	2 x 3 x 96" (5 x 7,6 x 244 cm)

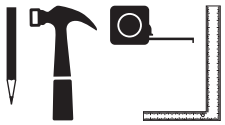

BEGIN

1. Orient **KZ** and **PT** on flat on floor as shown.
2. Place panel on **KZ** and **PT** with primed side up.
3. Nail **KZ** first, 1" (2,5 cm) from panel bottom.
   Use 1-1/2" (3,8 cm) nails only 6" (15 cm) apart.
4. Place **PT** flush to **KZ** and edge of panel. Hold the 33-1/2" (85 cm) measurement and nail with 1-1/2" (3,8 cm) 12" (30 cm) apart.

Do not nail in groove.

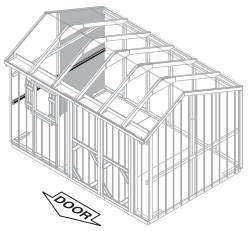

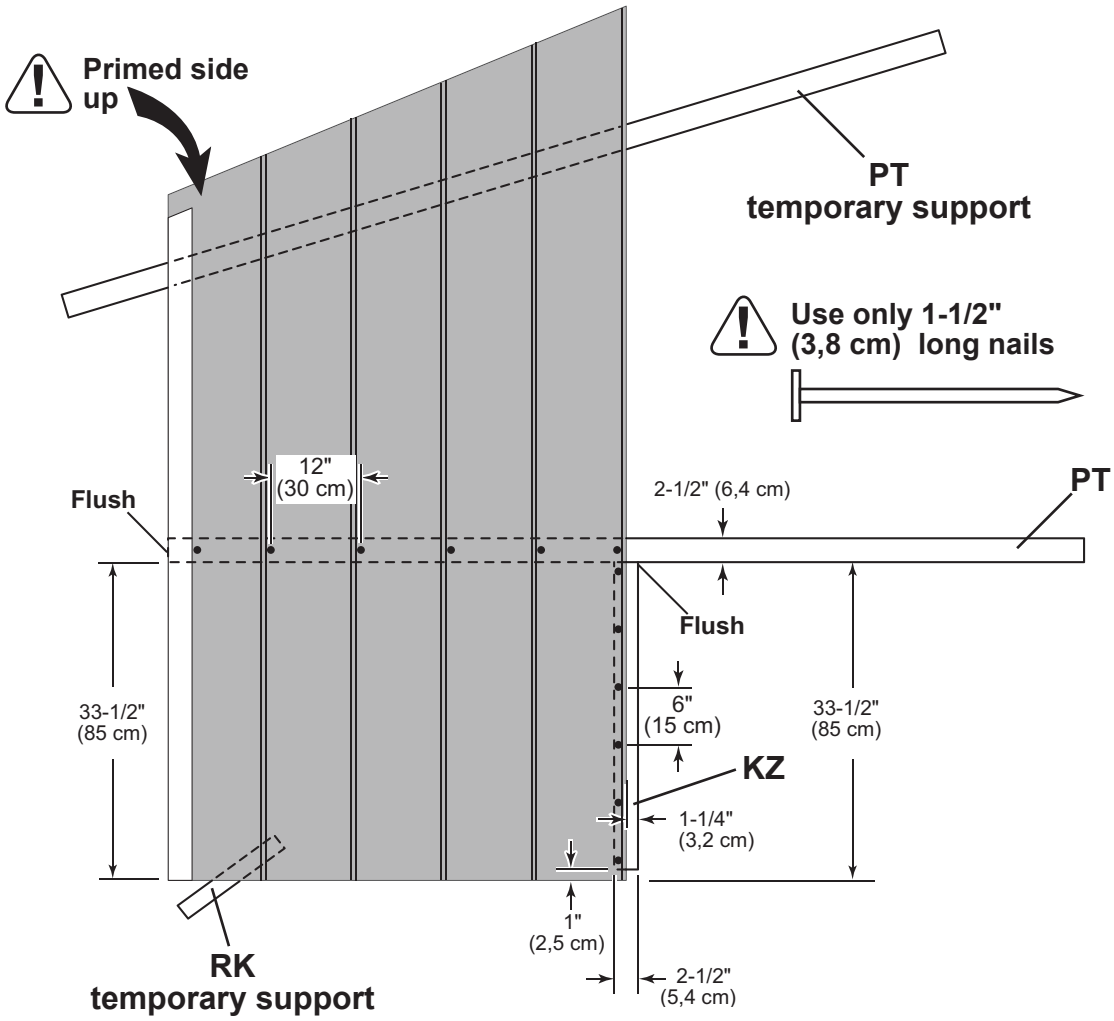

LEFT WALL

PARTS REQUIRED:

x17 — 1-1/2" (3,8 cm)

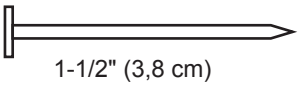

x1 **BJ**
2 x 3 x 29-1/2" (5 x 10 x 75 cm)

x1 **LF**
2 x 3 x 21-1/2" (5 x 7,6 x 55)

x1 **PT**
2 x 3 x 96" (5 x 7,6 x 244 cm)

x1 **TEMPORARY SPACER**
5/8 x 3 x 14" (1,6 x 7,6 x 35,5 cm)

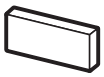

3/4" GAUGE BLOCK

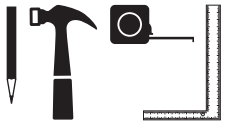

5 Place 3/4" gauge block on **PT.**

6 Place **LF** flush on gauge block and nail.

Use 1-1/2" (3,8 cm) nails only 6" (15 cm) apart.

7 Place **PT** flush to **LF** and panel edge. Hold the 58-1/4" (148 cm) measurement and nail with 1-1/2" (3,8 cm) nails 12" (30 cm) apart.

8 Place the 5/8" (16mm) spacer on **PT**.

9 Place **BJ** flush to spacer and nail.

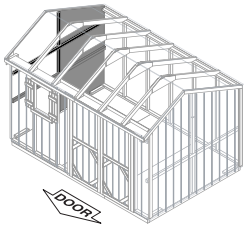

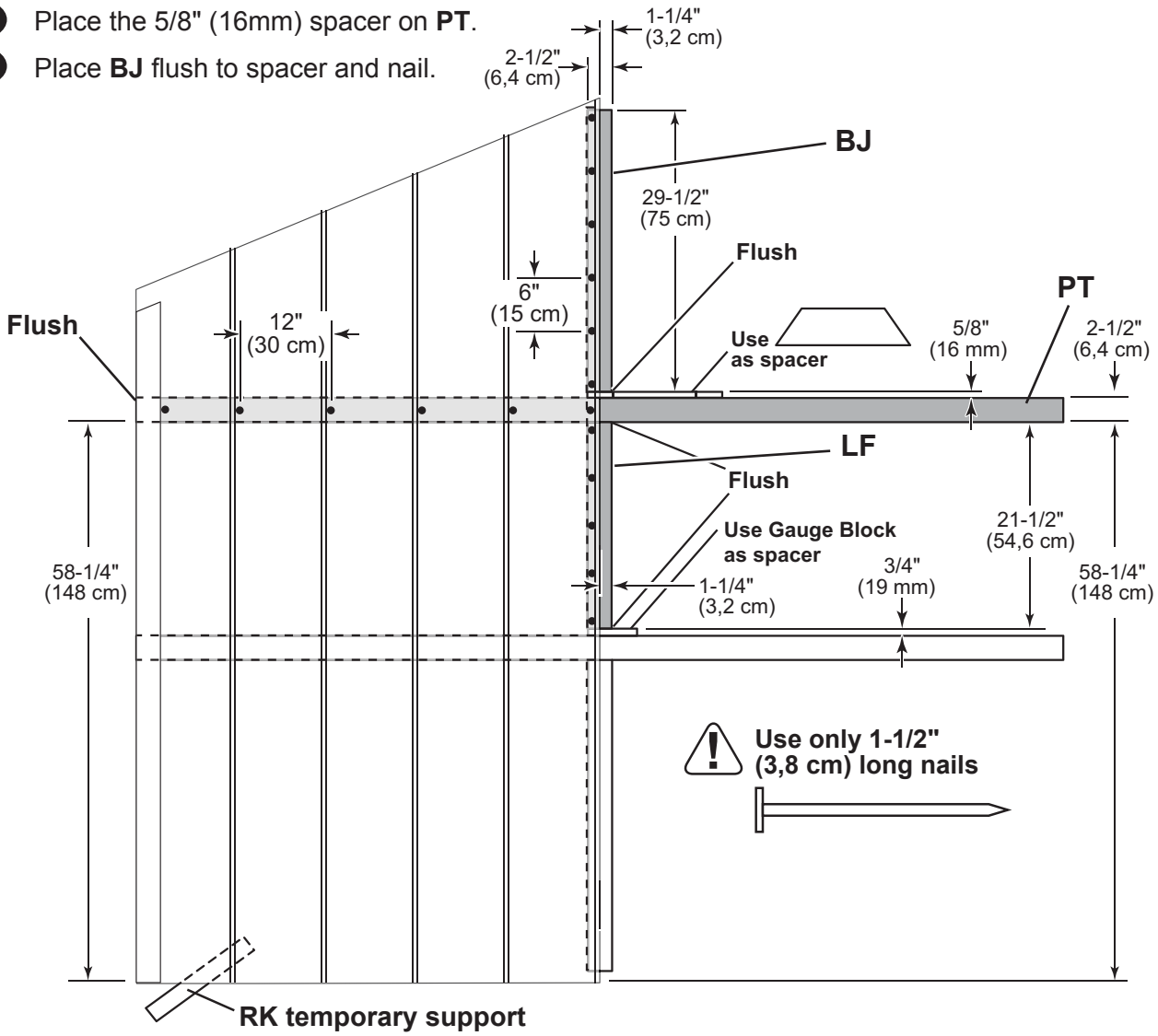

LEFT WALL

PARTS REQUIRED:

x33 — 1-1/2" (3,8 cm)

x1 — LEFT WALL FRONT ASSEMBLY

x2 RK — 2 x 3 x 13" (5 x 7,6 x 33 cm)

10 Place panel onto frame primed side up.

11 Nail using 1-1/2" (3,8 cm) nails 6" (15 cm) apart on edges, and 12" apart inside panel.

12 Nail **RK** using three 1-1/2" (3,8 cm) nails **(Fig. A)**.

FINISH

13 You have finished your left wall. Proceed to build your right wall.

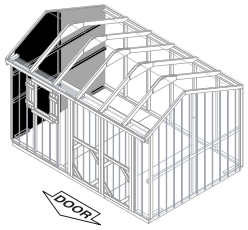

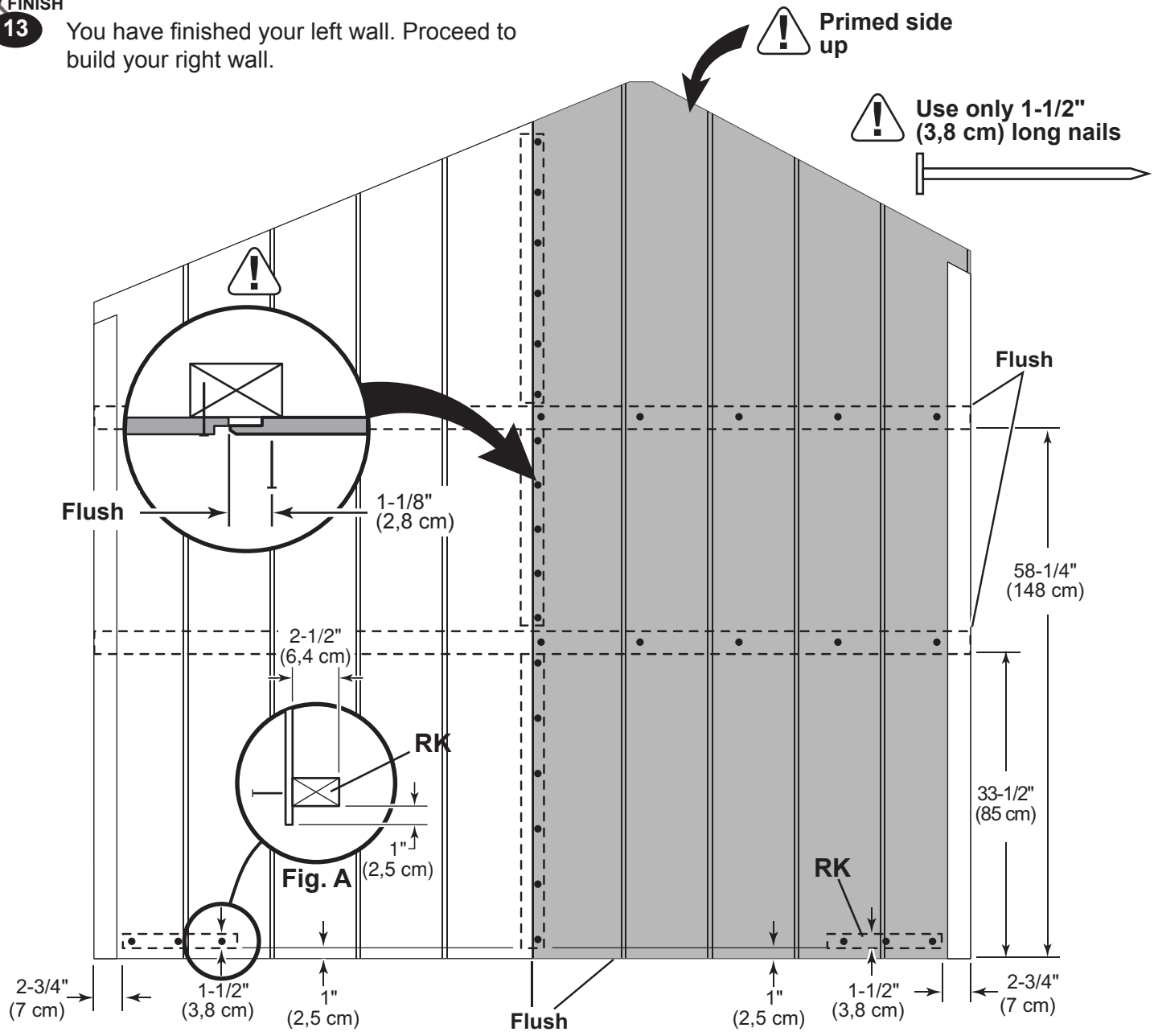

RIGHT WALL

PARTS REQUIRED:

x13 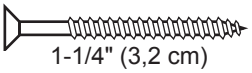
1-1/4" (3,2 cm)

x1

x1 **MM**
2 x 3 x 76-1/4" (5 x 7,6 x 194 cm)

BEGIN

1. Orient parts on the flat on floor as shown **(Fig. A,B)**.

   ⚠ Panel should be primed side down **(Fig. B)**.

2. Edges of panel should be flush to **MM**.

3. Use 1-1/4" (3,2 cm) screws spaced 6" (15 cm) apart as shown.

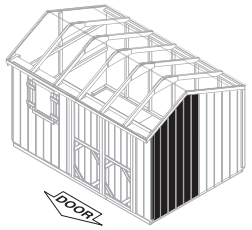

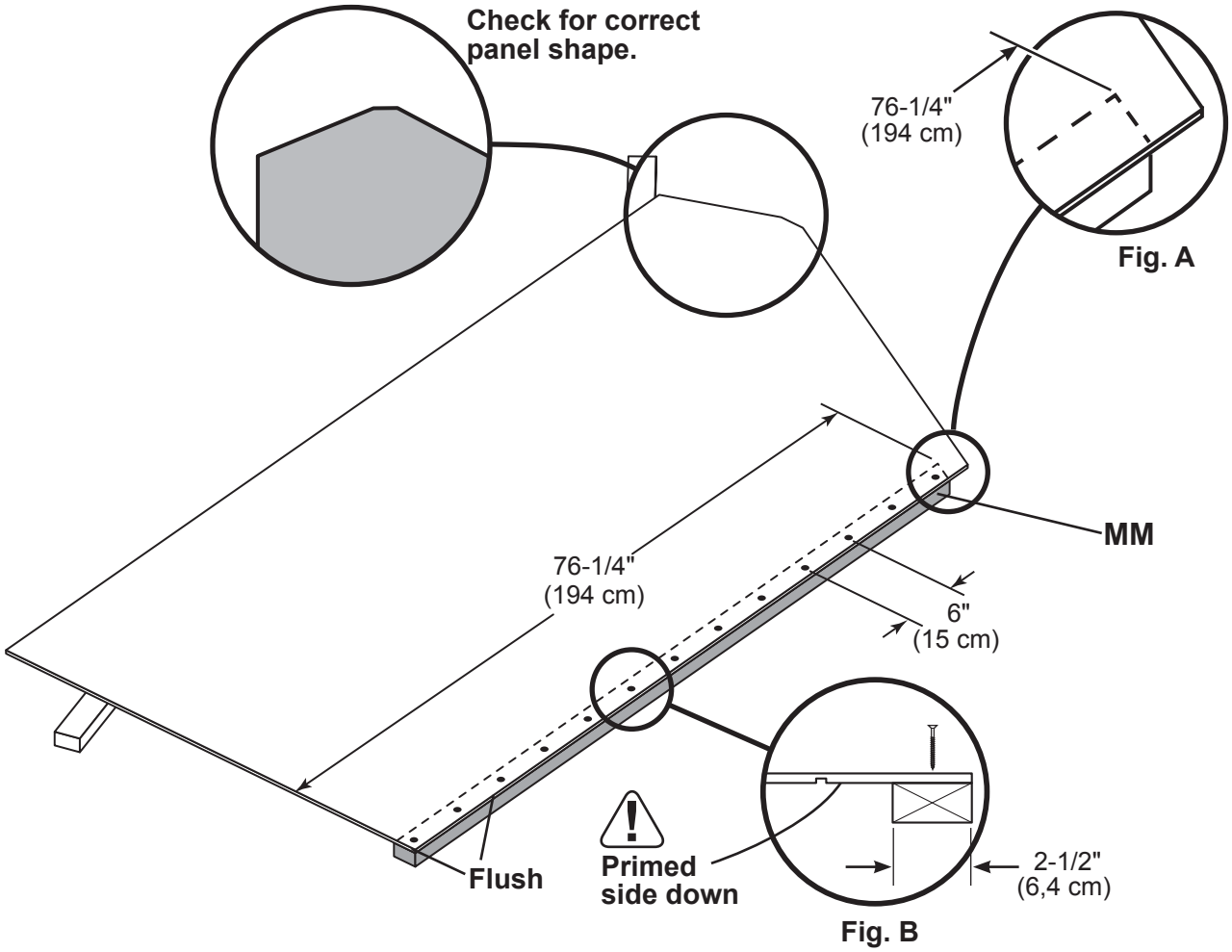

RIGHT WALL

PARTS REQUIRED:

x12 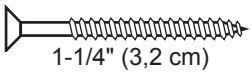
1-1/4" (3,2 cm)

x1

x1 NO
2 x 3 x 70-1/2" (5 x 7,6 x 179 cm)

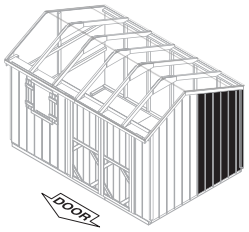

4 Orient parts on the flat on floor as shown **(Fig. A,B)**.

⚠ Panel should be primed side down **(Fig. B)**.

5 Edges of panel should be flush to **NO**.

6 Use 1-1/4" (3,2 cm) screws spaced 6" (15 cm) apart as shown.

FINISH

7 You have finished building your two right wall assemblies.

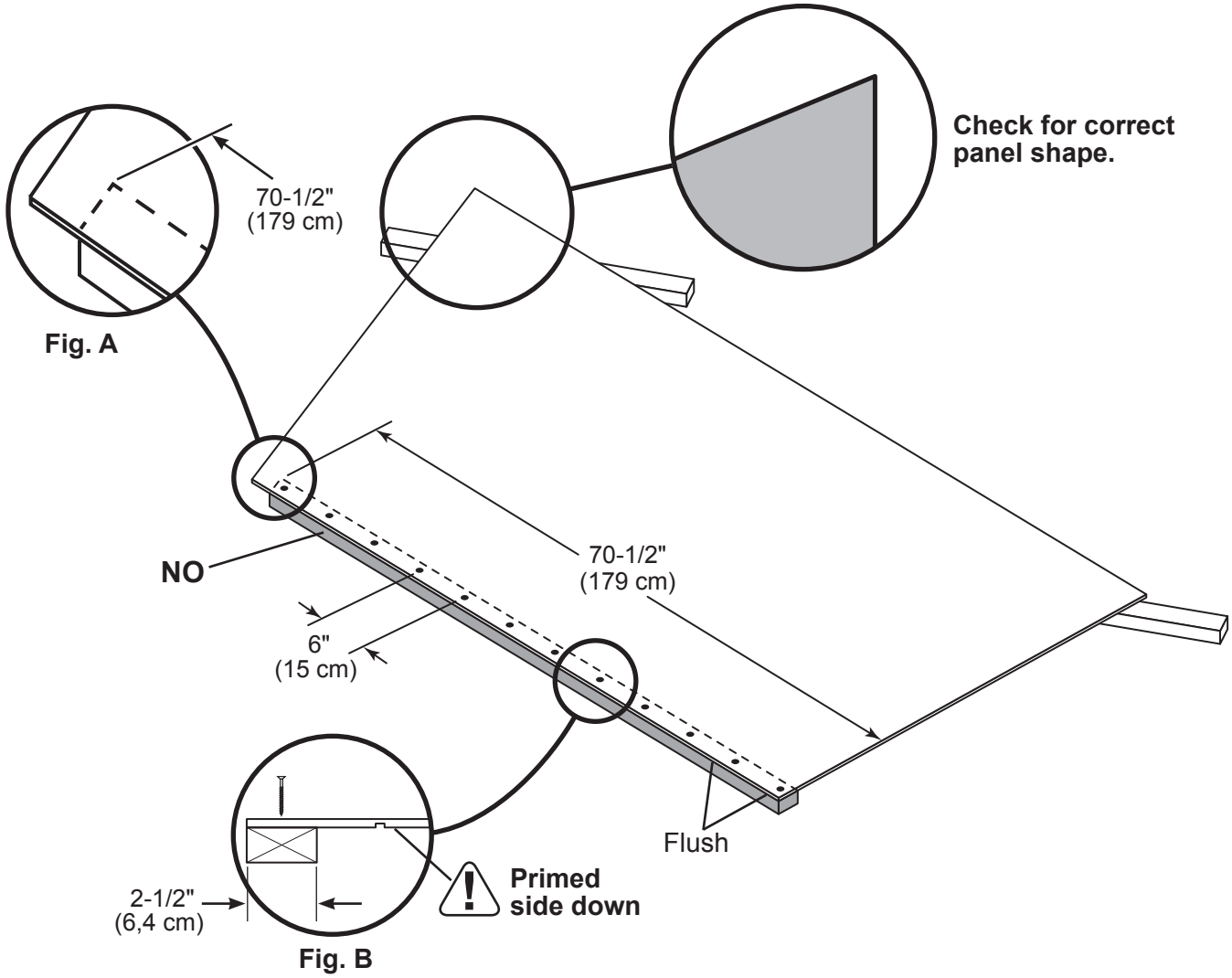

RIGHT WALL

PARTS REQUIRED:

x12

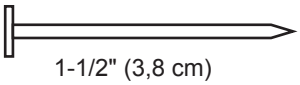

1-1/2" (3,8 cm)

x1

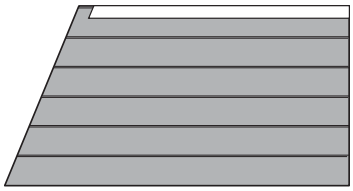

RIGHT WALL REAR ASSEMBLY

x1 RK 2 x 3 x 13" (5 x 7,6 x 33 cm)

x1 KZ 2 x 3 x 32-1/2" (5 x 10 x 83 cm)

x2 PT 2 x 3 x 96" (5 x 7,6 x 244 cm)

BEGIN

1. Orient **KZ** and **PT** on the flat on floor as shown.
2. Place panel on **KZ** and **PT** with primed side up.
3. Nail **KZ** first, 1" (2,5 cm) from panel bottom.

   Use 1-1/2" (3,8 cm) nails 6" (15 cm) apart.

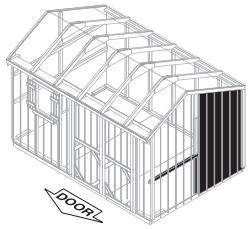

4. Place **PT** flush to **KZ** and edge of panel. Hold the 33-1/2" (85 cm) measurement and nail with 1-1/2" (3,8 cm) 12" (30 cm) apart.

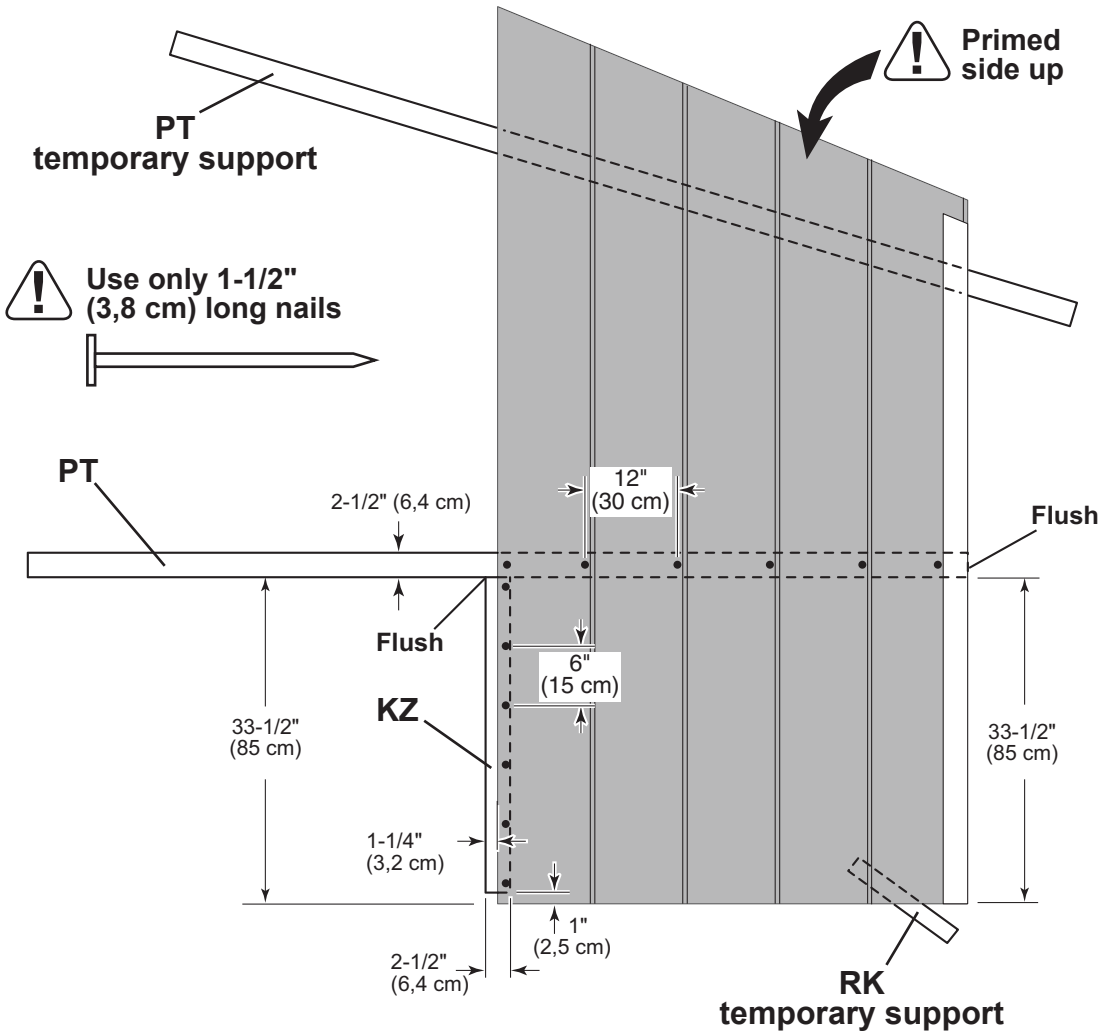

RIGHT WALL

PARTS REQUIRED:

x1 KZ
2 x 3 x 32-1/2" (5 x 10 x 83 cm)

x1 LF
2 x 3 x 21-1/2" (5 x 7,6 x 55)

x1 TEMPORARY SPACER
5/8 x 3 x 14" (1,6 x 7,6 x 35,5 cm)

x10

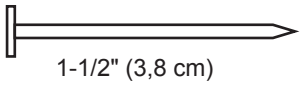

1-1/2" (3,8 cm)

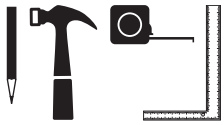

5 Place **KZ** flush on **PT** and nail with 1-1/2" (3,8 cm) nails 6" (15 cm) apart.

6 Place the 5/8" (16 mm) spacer on **KZ**

7 Place **LF** flush to spacer and nail with 1-1/2" (3,8 cm) nails 6" (15 cm) apart.

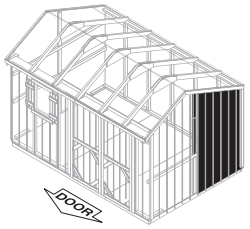

Use only 1-1/2" (3,8 cm) long nails

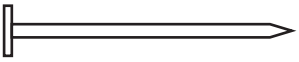

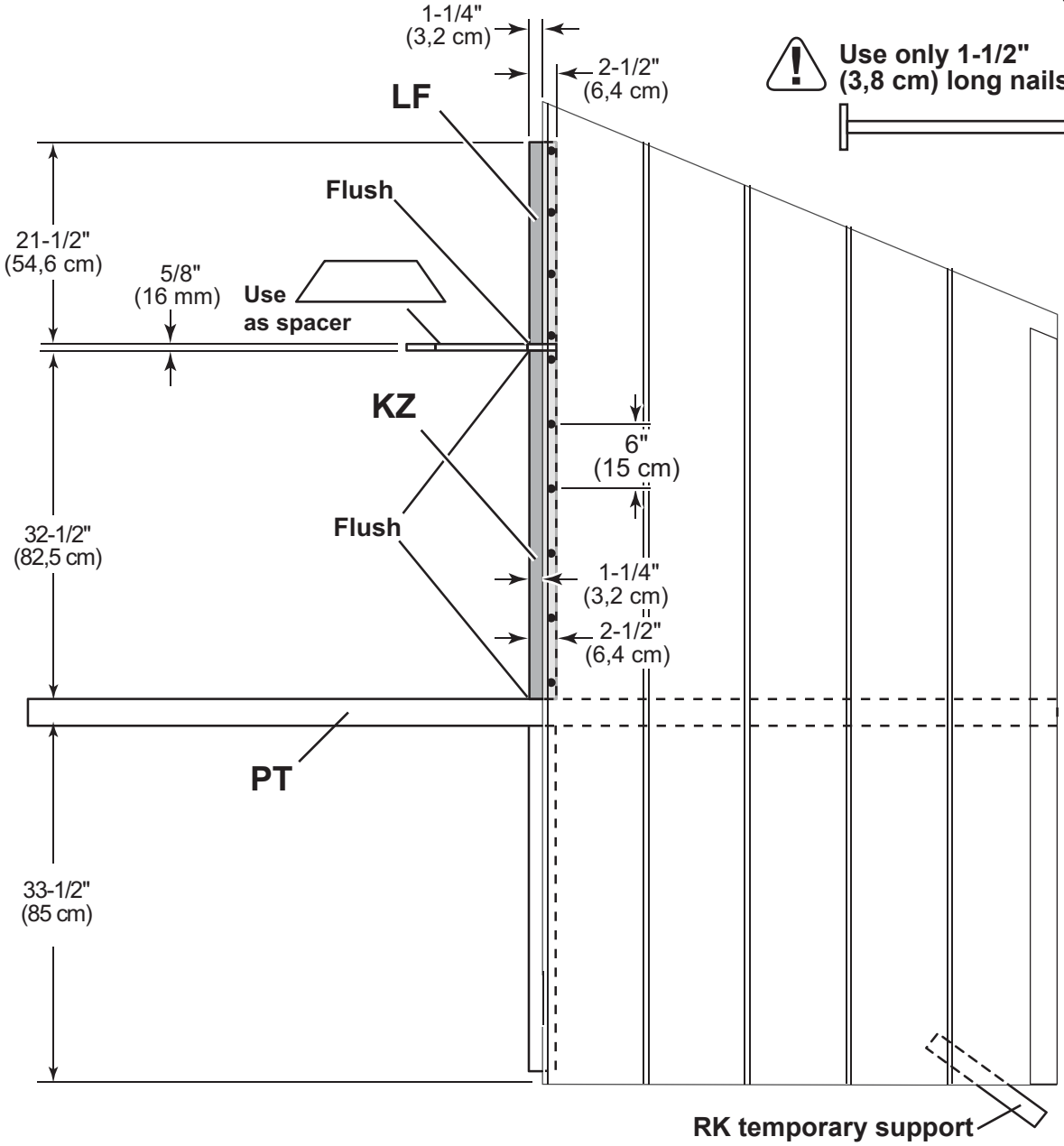

RIGHT WALL

PARTS REQUIRED:

x28 — 1-1/2" (3,8 cm)

x1 — RIGHT WALL FRONT ASSEMBLY

x2 RK — 2 x 3 x 13" (5 x 7,6 x 33 cm)

8 Place panel onto frame primed side up.

9 Nail using 1-1/2" (3,8 cm) nails 6" (15 cm) apart on edges, and 12" apart inside panel.

10 Nail **RK** using three 1-1/2" (3,8 cm) nails **(Fig. A)**.

Do not nail in groove.

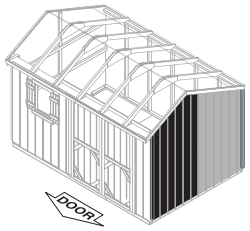

FINISH

11 You have finished your right wall.

Primed side up

Use only 1-1/2" (3,8 cm) long nails

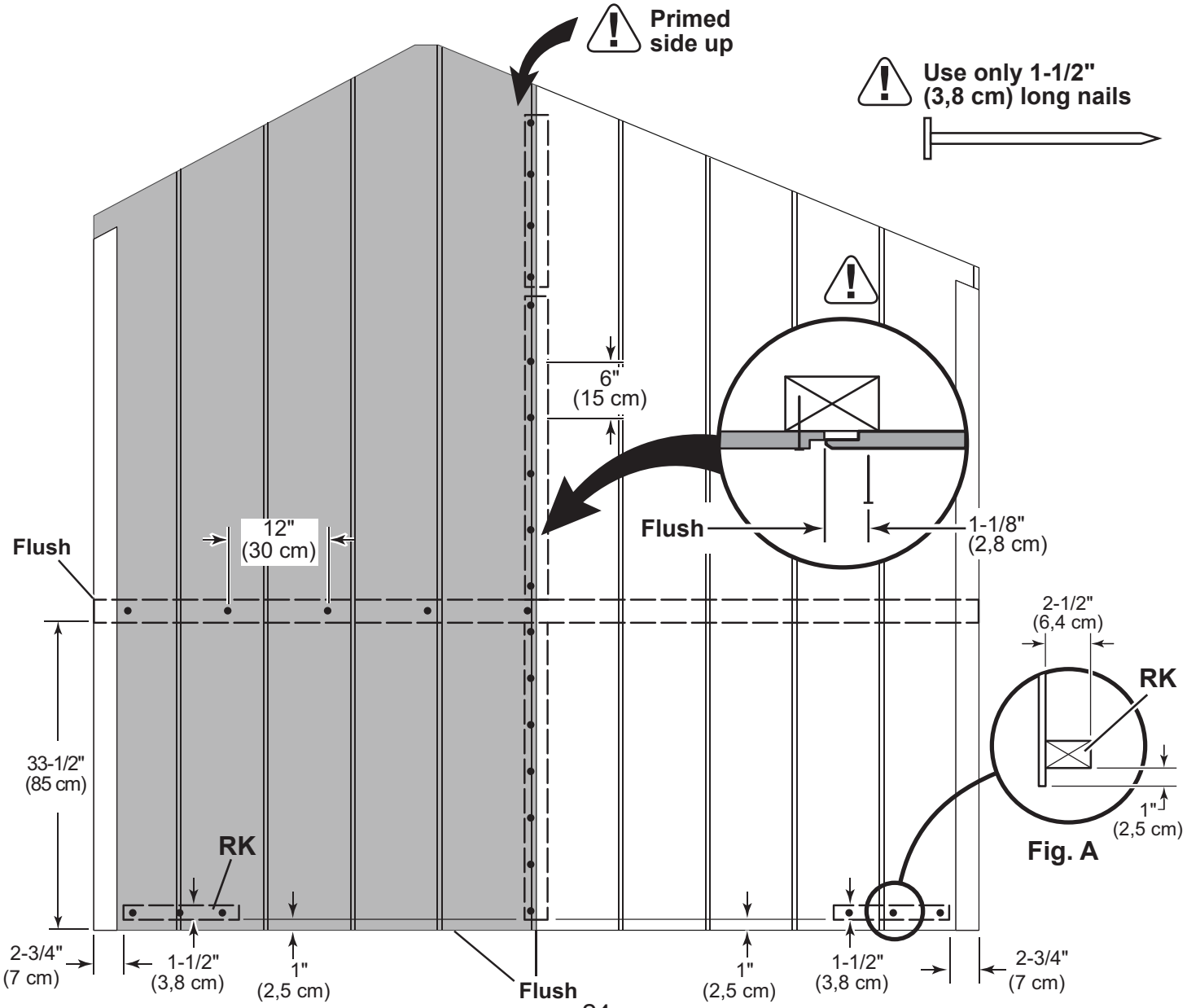

Fig. A

BACK WALL

PARTS REQUIRED:

x5 2 x 3 x 66-1/2" (5 x 7,6 x 169 cm)

x2 2 x 3 x 46-1/2" (5 x 7,6 x 118 cm)

x2 2 x 3 x 94-1/2" (5 x 7,6 x 240 cm)

x24 3" (7,6 cm)

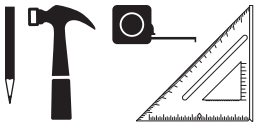

BEGIN

1. Orient parts on edge on floor as shown. Measure and mark.

2. Attach with 3" (7,6 cm) nails, two at each connection.

HINT:
For easier nailing stand on frame.

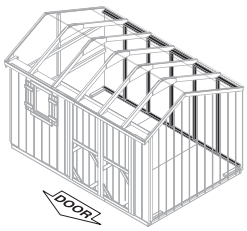

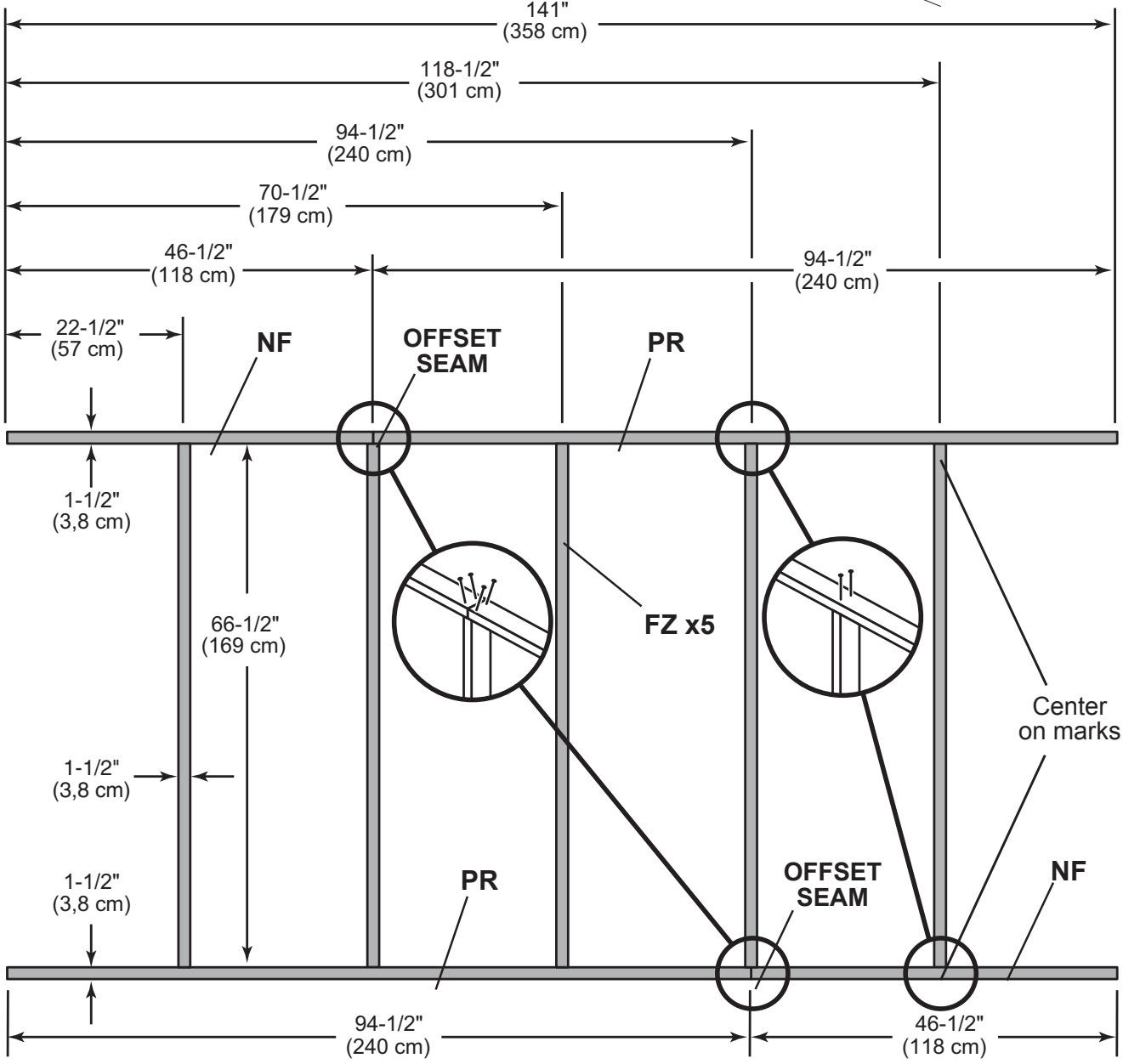

BACK WALL

PARTS REQUIRED:

x34

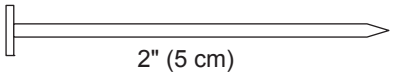

2" (5 cm)

x1

3/8 x 48 x 72"
(1 x 122 x 183 cm)

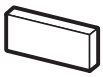

3/4" GAUGE BLOCK

x1 **RK** 2 x 3 x 13" (5 x 7,6 x 33 cm) as spacer

Ensure your wall frame is square by installing one panel and squaring frame.

Do not nail in groove.

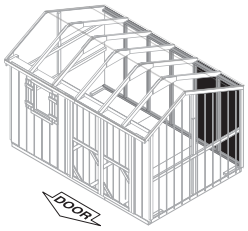

3 Place the **48 x 72"** panel onto wall frame with primed side up as shown. Note the lip and square edges.

Use the gauge block to mark the 3/4" measurement on the wall stud. Use RK as a 1-1/2" gauge block at top. Secure panel with two 2" nails in the corners **(Fig. A)**.

4 Move to the opposite end. Using the long edge of the panel as a lever move the panel side-to-side until you have a 3/4" measurement on the wall stud. Secure corner with two 2" nails **(Fig. B)**.

5 Nail the panel using 2" nails 6" apart on edges and 12" apart inside panel.

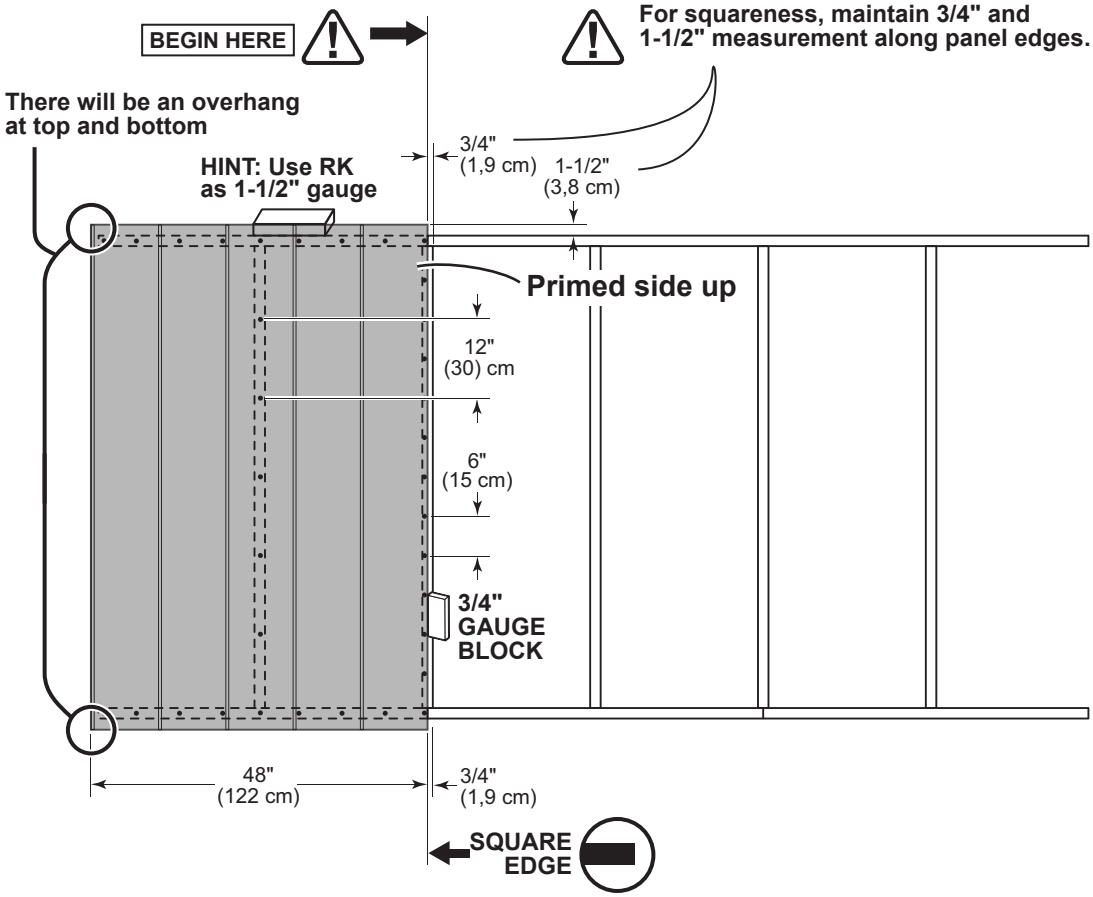

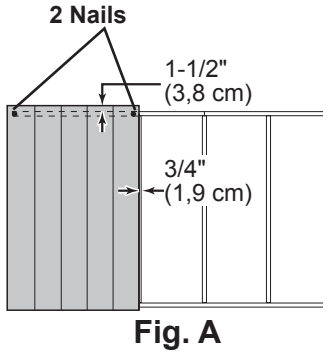

Fig. A

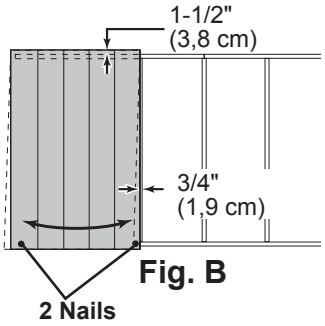

Fig. B

BACK WALL

PARTS REQUIRED:

x192 — 2" (5 cm)

x2 — 3/8 x 48 x 72" (1 x 122 x 183 cm)

x1 RK — 2 x 3 x 13" (5 x 7,6 x 33 cm) as spacer

3/4" GAUGE BLOCK

6 Place center 48" panel on frame as shown with primed side facing up.
NOTE THE SQUARE AND LIP EDGES.

Nail using 2" nails 6" apart on edges and 12" apart inside panel.

Do not nail in groove.

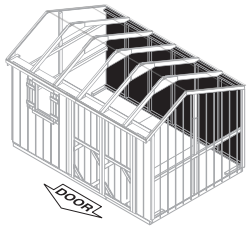

For squareness maintain flush and 1-1/2" measurement along panel edges.

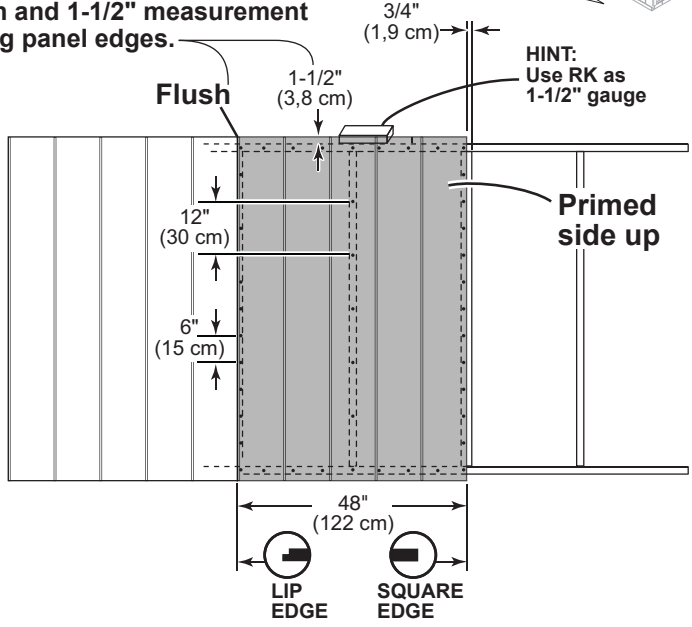

7 Place end 48" panel on frame as shown with primed side facing up.
NOTE THE SQUARE AND LIP EDGES.

Nail using 2" nails 6" apart on edges and 12" apart inside panel.

For squareness maintain flush and 1-1/2" measurement along panel edges.

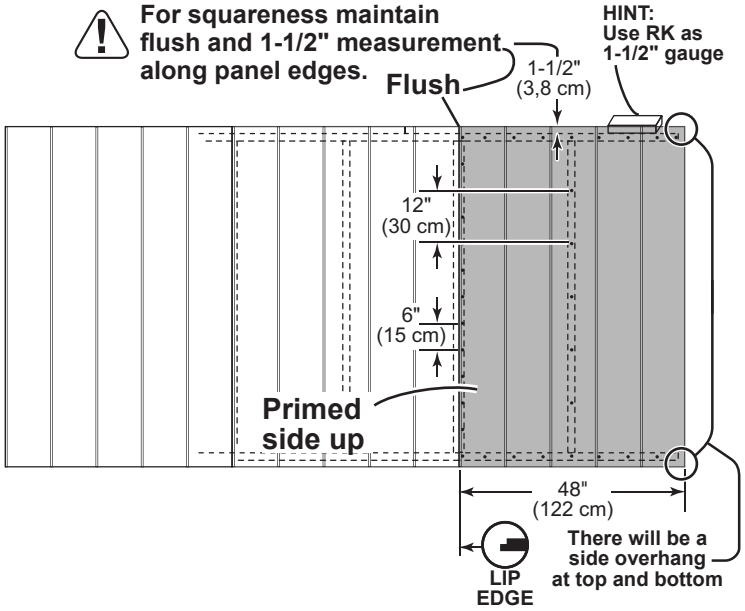

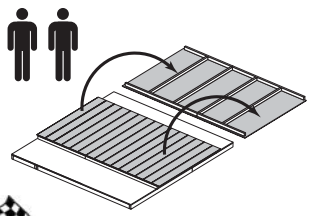

FINISH

8 You have finished building your back wall.

FRONT WALL

PARTS REQUIRED:

x18 — 3" (7,6 cm)

x1	FL	2 x 3 x 14-1/2" (5 x 7,6 x 36,8 cm)
x1	FN	2 x 3 x 62-1/2" (5 x 7,6 x 158,8 cm)
x1	NF	2 x 3 x 46-1/2" (5 x 7,6 x 118 cm)
x4	OT	2 x 3 x 68" (5 x 7,6 x 173 cm)
x1	PR	2 x 3 x 94-1/2" (5 x 7,6 x 240 cm)

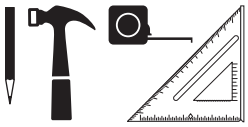

BEGIN

1. Orient parts on edge on floor as shown. Measure and mark.
2. Nail using two 3" (7,6 cm) nails at each connection.

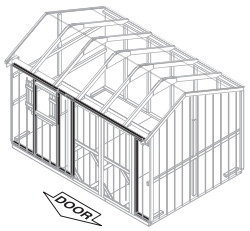

HINT:
For easier nailing stand on frame.

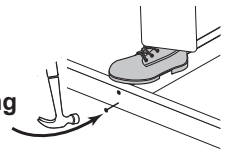

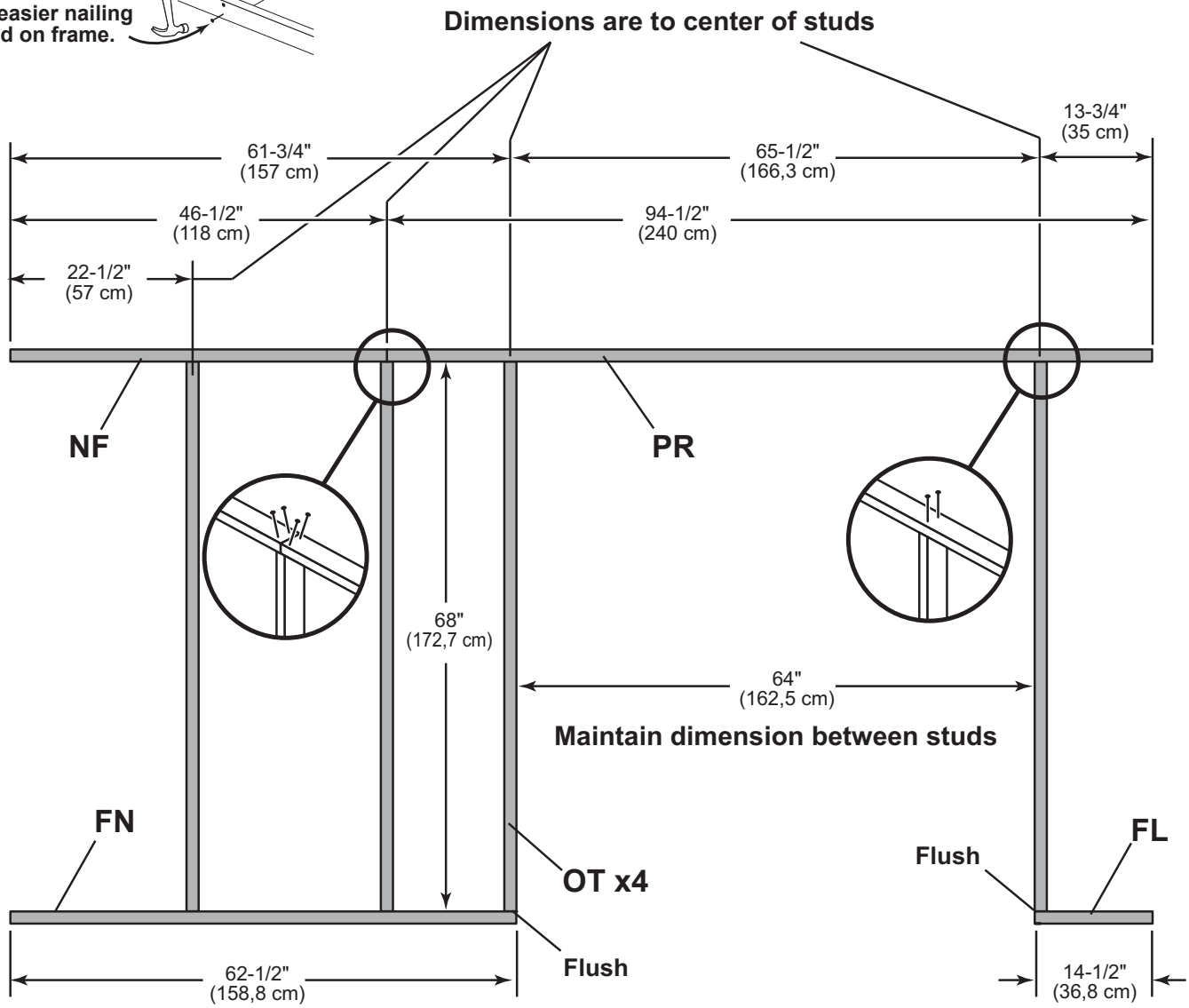

OVERHANG PANELS

PARTS REQUIRED:

x4 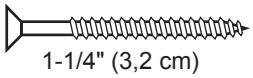 1-1/4" (3,2 cm)

x2 2 x 3 x 7-7/8" (5 x 7,6 x 20 cm)

x1 3/8 x 7-7/8 x 94-1/2" (0,9 x 20 x 240 cm)

x1 3/8 x 7-7/8 x 46-1/2" (0,9 x 20 x 118 cm)

3 Orient two overhang panels with the primed side up.

4 Attach panels flush to 2 x 3 x 7-7/8" (5 x 7,6 x 20 cm) using two 1-1/4" (3,2 cm) screws as shown.

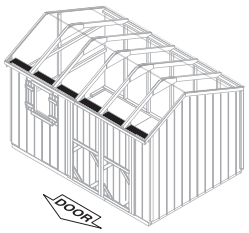

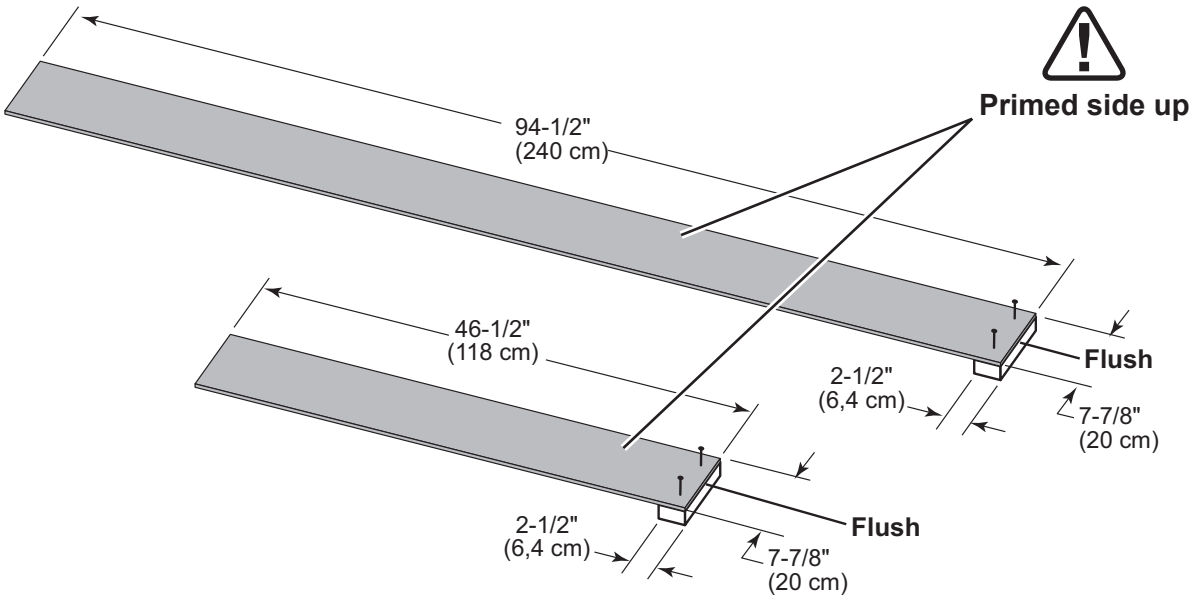

FRONT WALL

PARTS REQUIRED:

x16 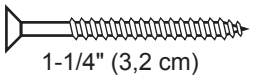
1-1/4" (3,2 cm)

x1 Overhang

x1 Overhang

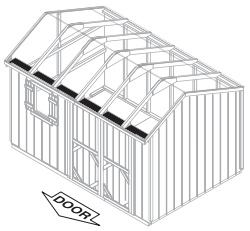

5 Place overhang on wall panel, flush to back side and ends.

Place overhang flush to 2 x 3" **(Fig. A.)**

6 Screw into top plate using (14) 1-1/4"(3,2 cm) screws.

Keep overhang flush to 2 x 3" **(Fig. B.)**

FINISH

7 You have finished attaching your overhang.

Make sure overhangs are flush to 2 x 3" the entire length

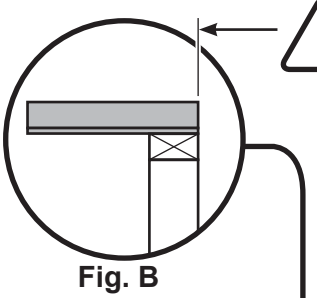

Fig. B

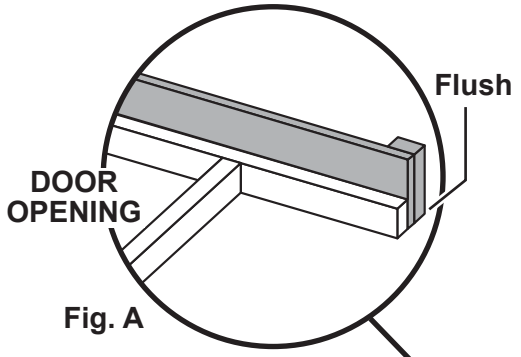

Fig. A

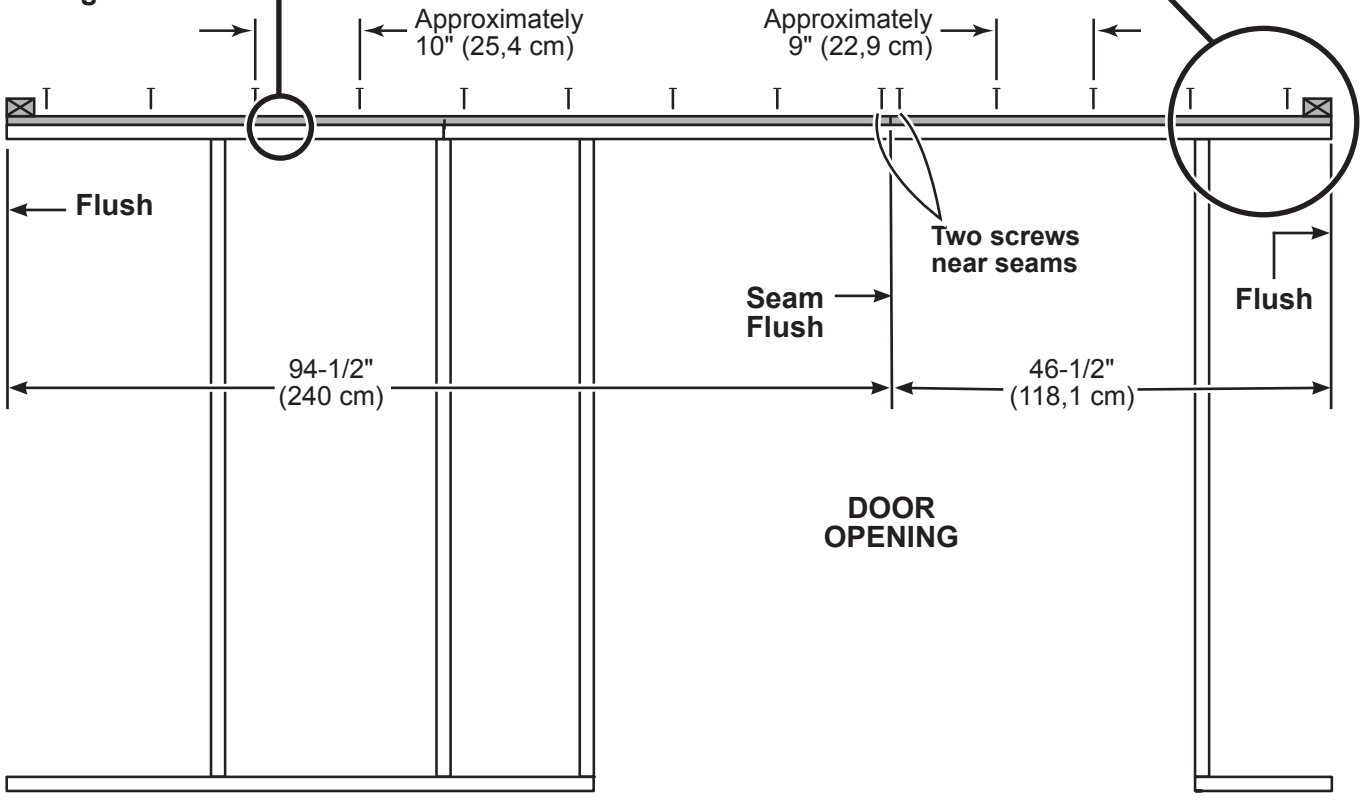

FRONT WALL

PARTS REQUIRED:

x34

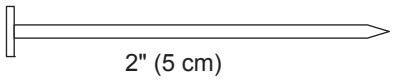

2" (5 cm)

x1

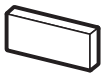

3/4" GAUGE BLOCK

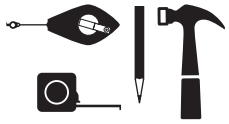

Ensure your wall frame is square by installing one panel and squaring frame.

BEGIN

1 Place the panel onto wall frame flush under overhang with primed side up as shown **(Fig. A)**.

Use the gauge block to mark the 3/4" measurement on the wall stud. Secure panel with two 2" nails in the corners **(Fig. B)**.

Do not nail in groove.

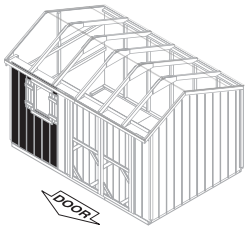

2 Move to the opposite end. Using the long edge of the panel as a lever move the panel side-to-side until you have a 3/4" measurement on the wall stud **(Fig. C)**. Secure corner with two 2" nails.

3 Nail the panel using 2" nails 6" apart on edges and 12" apart inside panel.

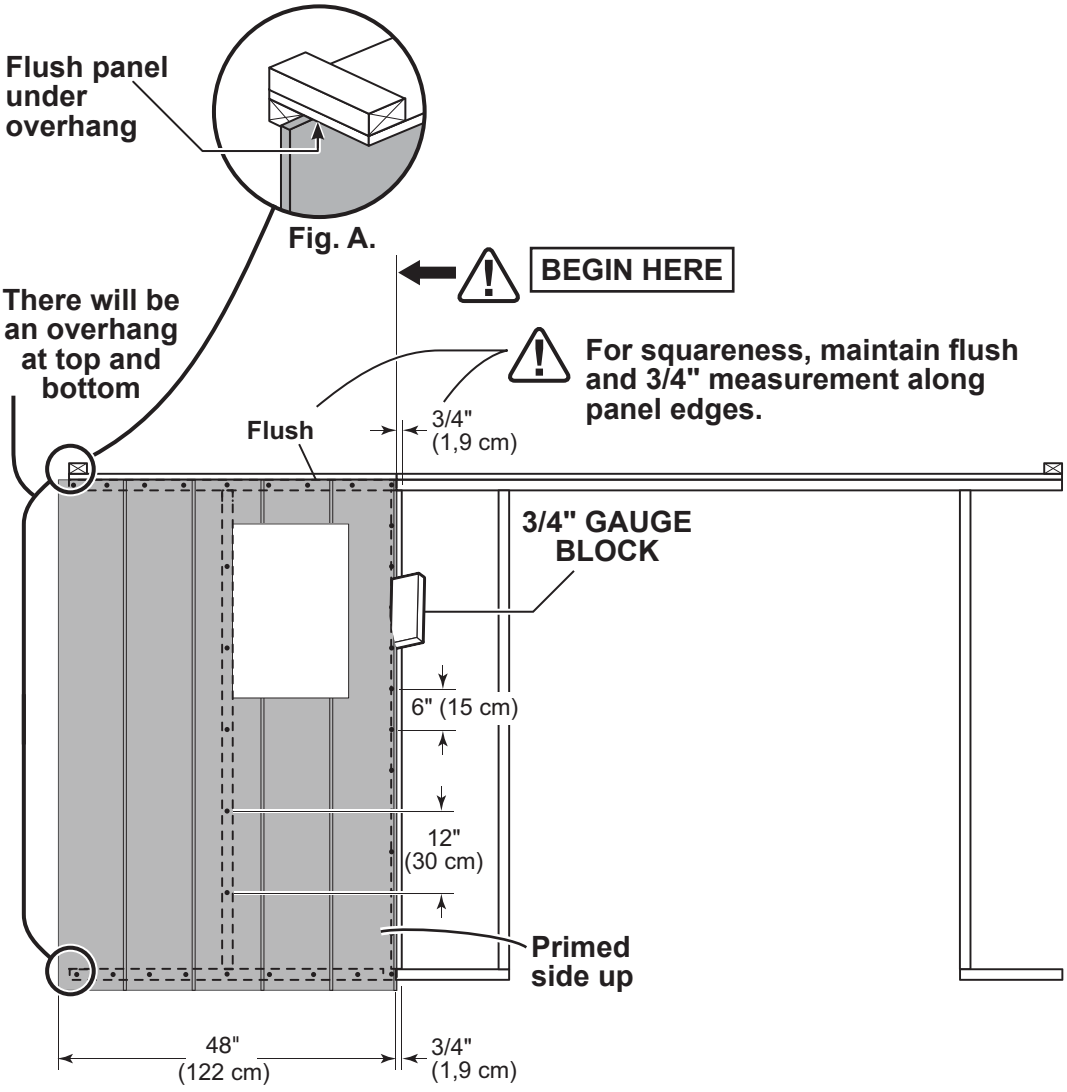

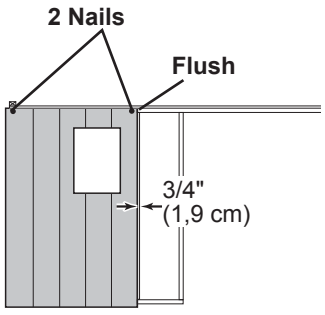

Fig. B

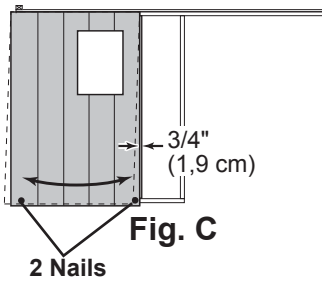

Fig. C

FRONT WALL

PARTS REQUIRED:

x49 — 2" (5 cm)

x2 — 3" (7,6 cm)

x2 — 3/8 x 15-7/8 x 72" (1 x 40 x 183 cm)

x1 — PT — 2 x 3 x 96" (5 x 7,6 x 244 cm)

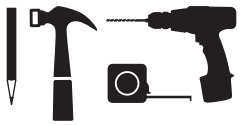

4 Continue installing panels primed side up flush under overhang **(Fig. A).** Note 1/4" (6,4 mm) offset on right panel.

5 Use **PT** as a brace to maintain 64" (163 cm) opening. Use two 3" screws to attach.

6 Use 2" nails 6" apart on edges, and 12" apart inside panel.

FINISH

7 You have finished attaching your front wall panels. Proceed to erect your walls.

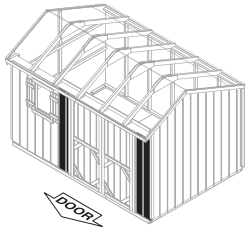

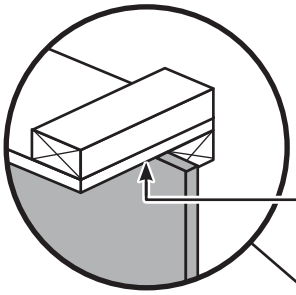

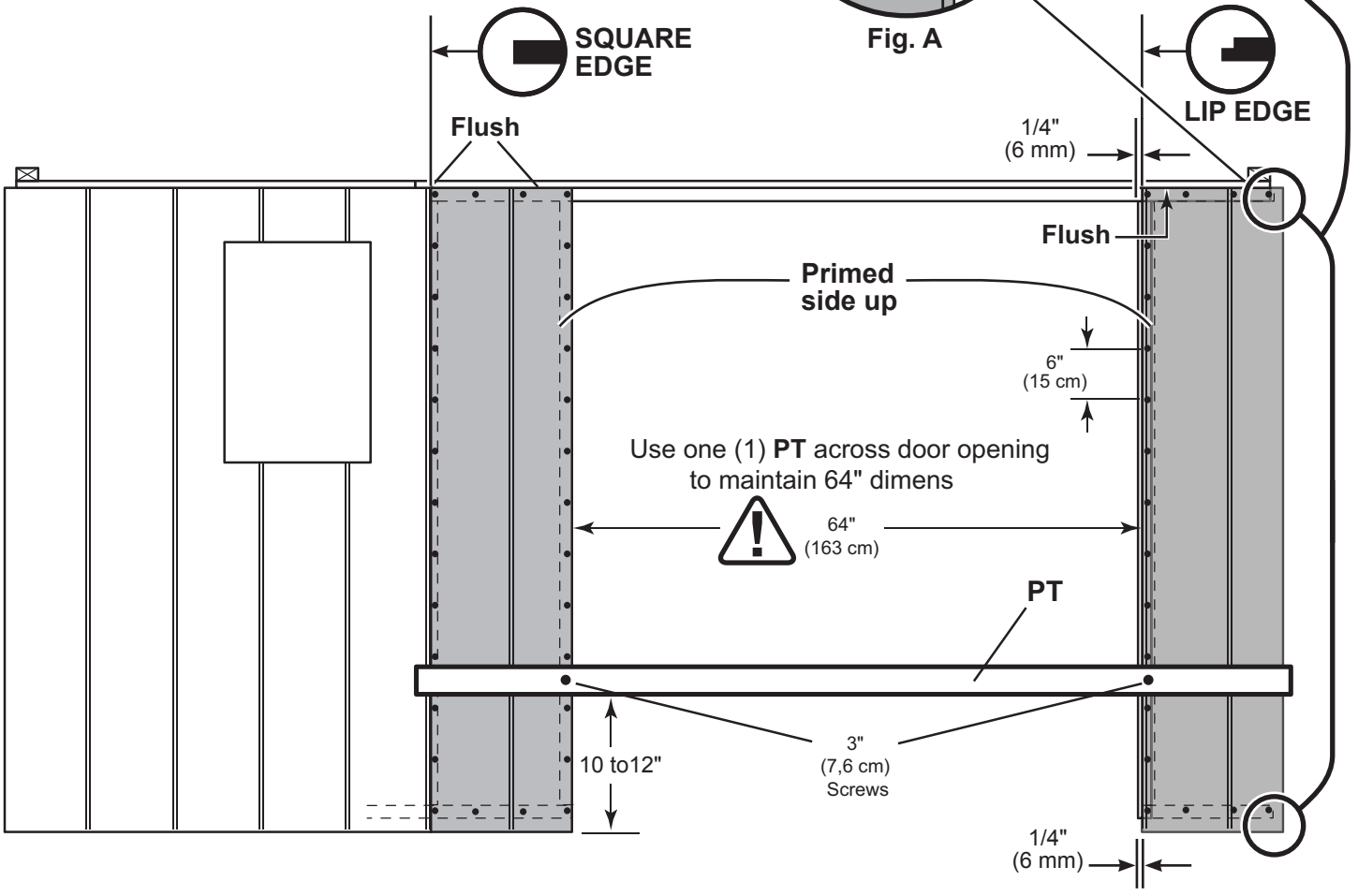

LEFT WALL INSTALLATION

PARTS REQUIRED:

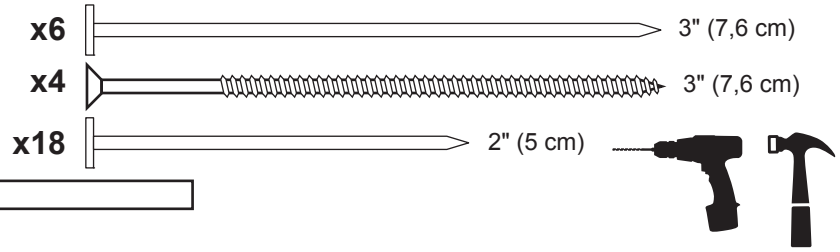

x1 **PT**
2 x 3 x 96" (5 x 7,6 x 244 cm)

BEGIN

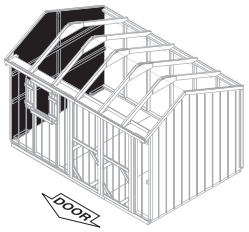

1. Center left wall assembly on the 96" (244 cm) floor dimension.
2. Use **PT** as a temporary brace. Secure with two 3" screws.

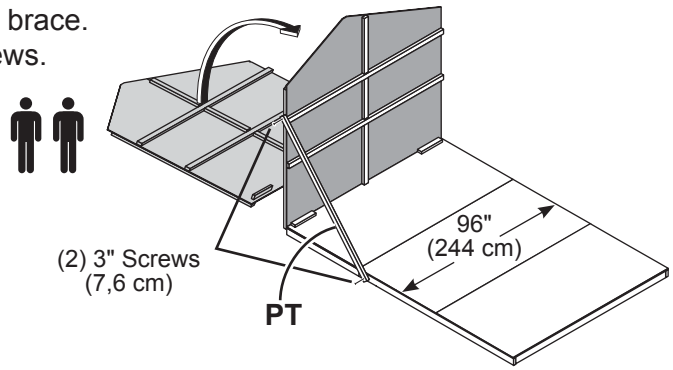

3. First, nail lower edge of panel to floor frame using 2" nails 6" apart Angle nail to hit floor frame **(Fig. A)**.
4. Attach **RK**, using three 3" (7,6 cm) nails as shown. Angle nails to hit floor frame (**Fig. A**).
5. Secure back wall uprights to floor using two 3" screws **(Fig. B)**.

Do not nail in groove.

Nail 2" nails first.

FINISH

6. You have finished standing your left wall.

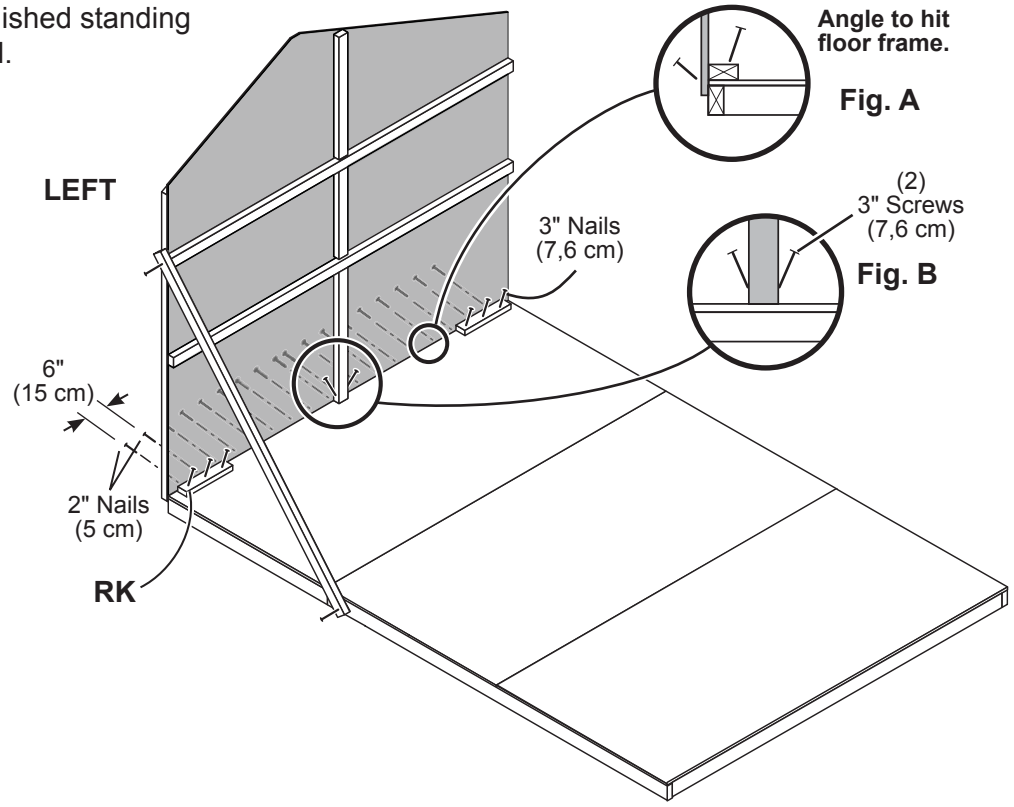

BACK WALL INSTALLATION

PARTS REQUIRED:

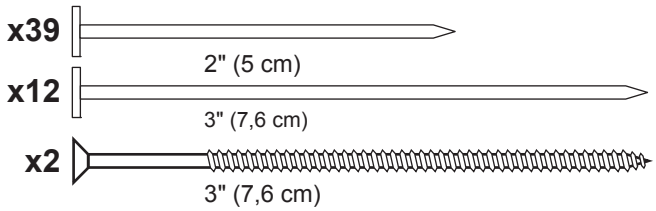

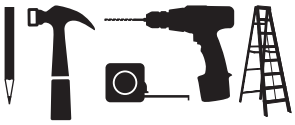

It is important to secure the Back Wall in the following order.

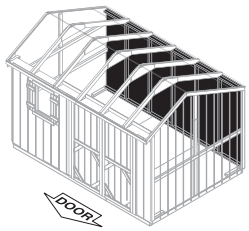

BEGIN

Stand Back Wall Assembly on Floor. **1-1/2" (3,8 cm) Panel overhang is at top.**

1 Center back wall on floor, side-to-side.

Nail the lower back wall corner to the side wall trim with one 2" (5 cm) nail **(Fig. A)**.

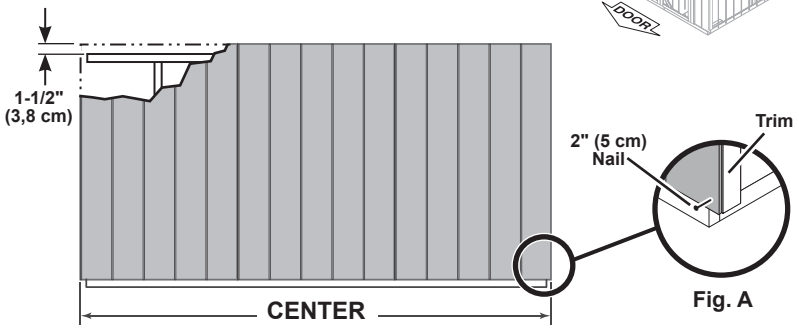

Fig. A

2 Be sure the measurement between the panel edge and the trim is the same along the entire length. Then secure with one 2" nail in the upper corner **(Fig. B)**.

Nail along the panel edge into the trim using 2" nails spaced 6" apart.

Nail along bottom of panel using 2" nails 6" apart. Angle nail to hit floor frame **(Fig. C)**.

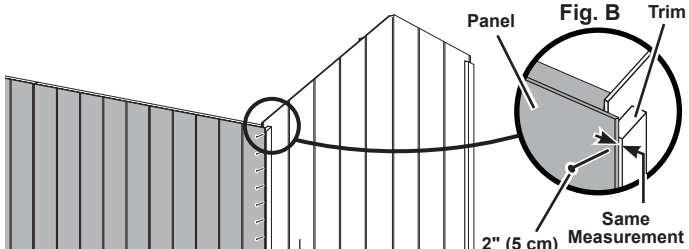

Fig. B

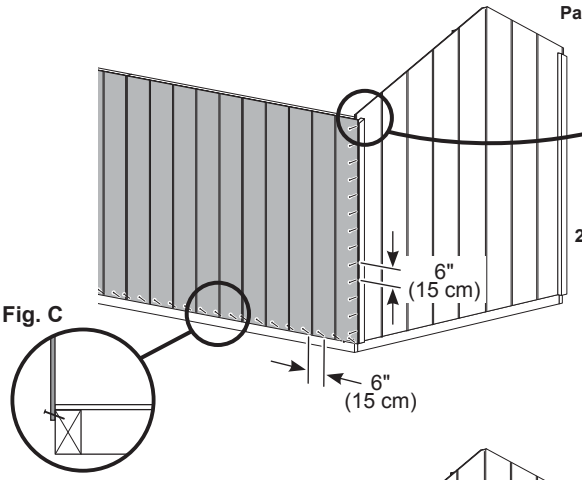

Fig. C

3 Nail down the bottom plate using two 3" nails between the wall studs.

Screw through the backwall trim into the top and bottom plates using one 3" screw **(Fig. D, E)**.

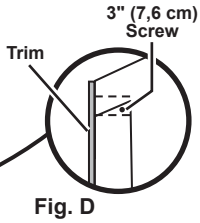

Fig. D

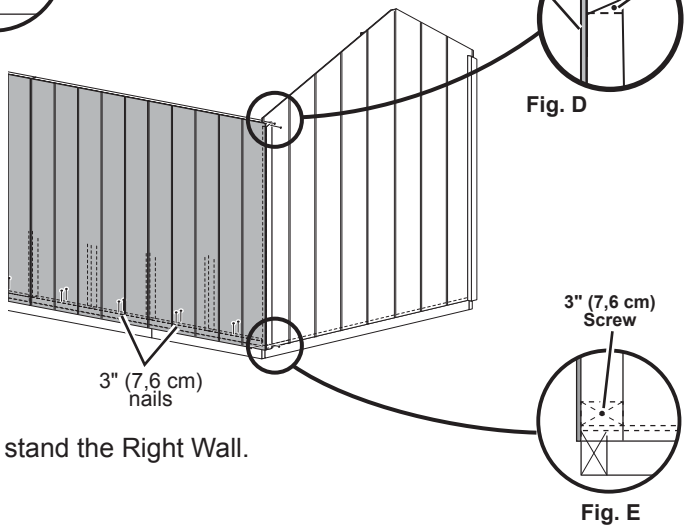

Fig. E

FINISH

4 You have finished standing your Back Wall. Proceed to stand the Right Wall.

RIGHT WALL INSTALLATION

PARTS REQUIRED:

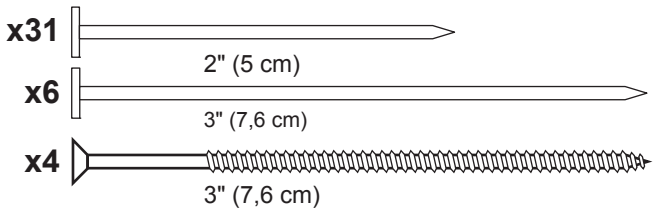

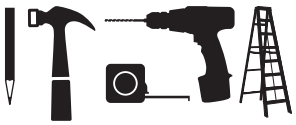

BEGIN

Stand right wall assembly on floor.

It is important to secure the right wall in the following order.

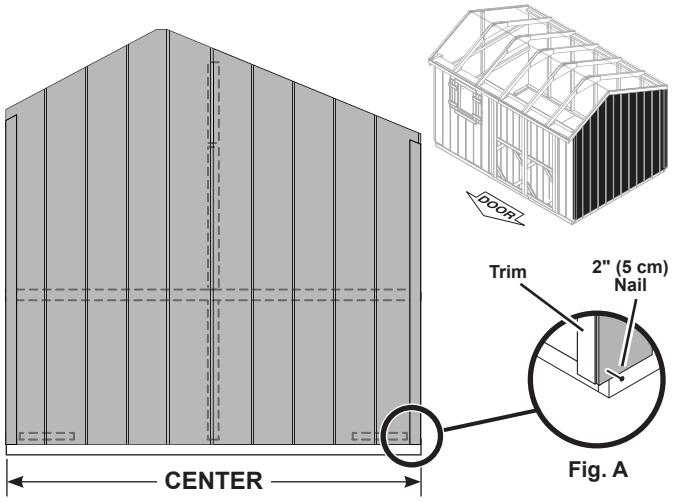

Fig. A

1 Center right wall on floor, side-to-side.

Nail the lower back wall corner to the right wall trim. Secure with one 2" (5 cm) nail **(Fig. A)**.

2 Be sure the measurement between the panel edge and the trim is the same along the entire length. Then secure with one 2" nail in the upper corner **(Fig. B)**.

Nail along the panel edge into the trim using 2" nails spaced 6" apart.

Nail along bottom of panel using 2" nails 6" apart. Angle nail to hit floor frame **(Fig. C)**.

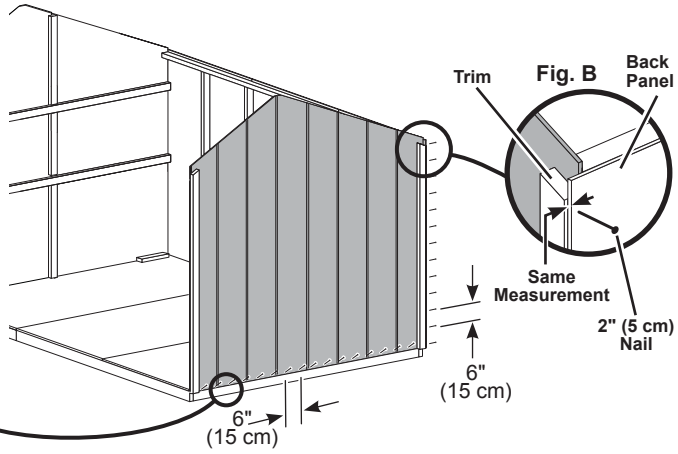

Fig. B

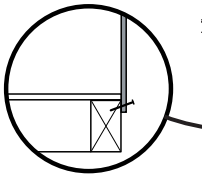

Fig. C

3 Nail down **RK** using three 3" nails on each as shown and secure center wall frame using two 3" screws **(Fig. D)**.

Screw through the right wall trim into the top and bottom plates using 3" screws **(Fig. E, F)**.

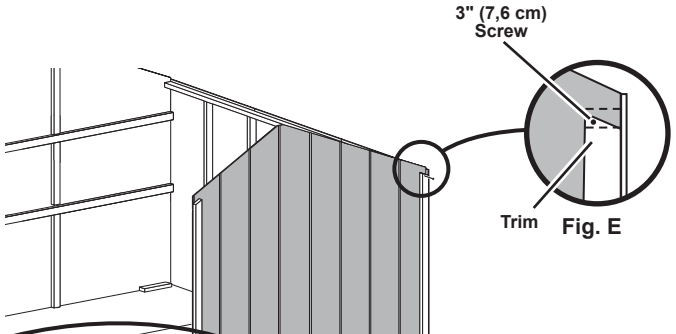

Fig. E

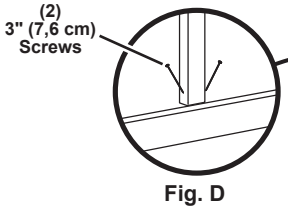

Fig. D

Fig. F

FINISH

4 You have finished standing your right wall. Proceed to stand the front Wall.

FRONT WALL INSTALLATION

PARTS REQUIRED:

x8 — 3" (7,6 cm)

x41 — 2" (5 cm) x26

x4 — 3" (7,6 cm)

BEGIN

Stand front wall on floor.

It is important to secure the front wall in the following order.

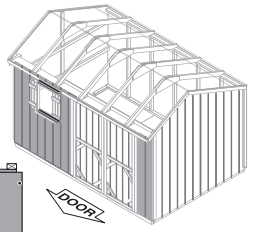

1 Center front wall on floor side-to-side.

Check the 64" door opening is held before nailing.

Nail the front wall flush to the floor using 2" nails 6" apart. Angle nails to hit floor frame **(Fig. A)**.

Nail the lower side wall corner to the side wall trim with one 2" nail **(Fig. B)**.

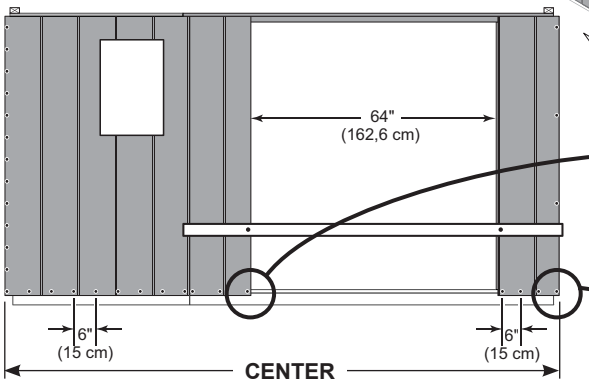

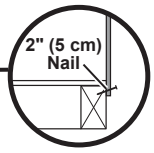

Fig. A

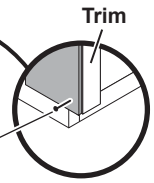

Fig. B

2 Be sure the measurement between the panel edge and the trim is the same along the entire length. Then secure with one 2" nail in the upper corner **(Fig. C)**.

Nail along the panel edge into the trim using 2" nails spaced 6" apart.

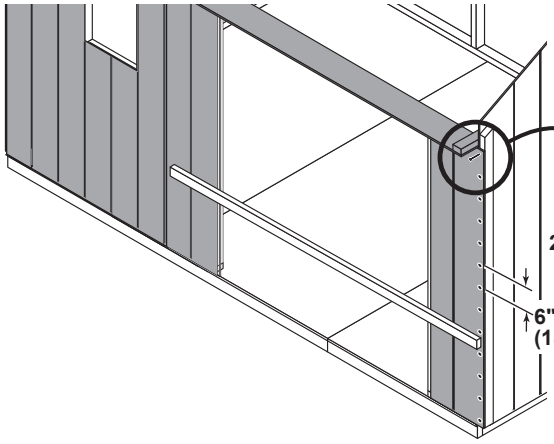

Fig. C

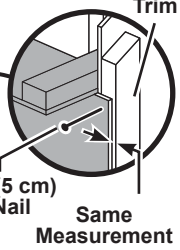

3 Nail down the bottom plate using two 3" nails between the wall studs. **(Fig. D)**.

Screw through the front wall trim into the top and bottom plates using one 3" screw **(Fig. E, F)**.

Repeat process to secure the left side of the front wall.

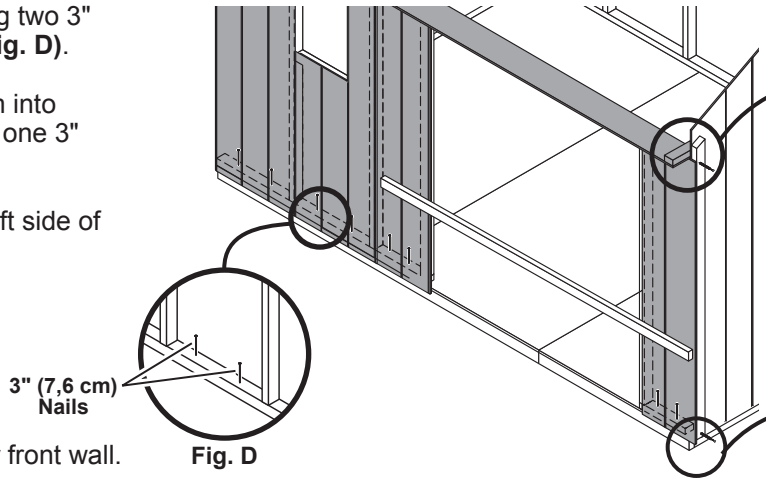

Fig. D

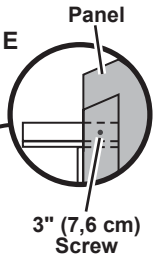

Fig. E

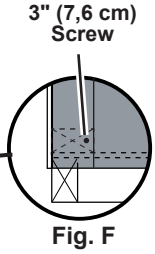

Fig. F

4 You have finished standing your front wall.

FRONT WALL

PARTS REQUIRED:

x8 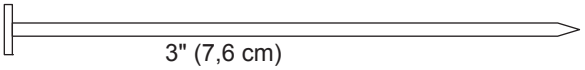

x2 LV
2 x 3 x 22-1/2" (5 x 7,6 x 57 cm)

5 On inside of front wall attach **LV** flush to window opening using 3" (7,6 cm) nails as shown.

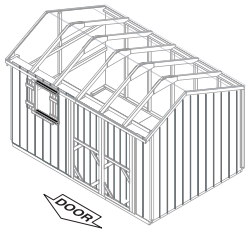

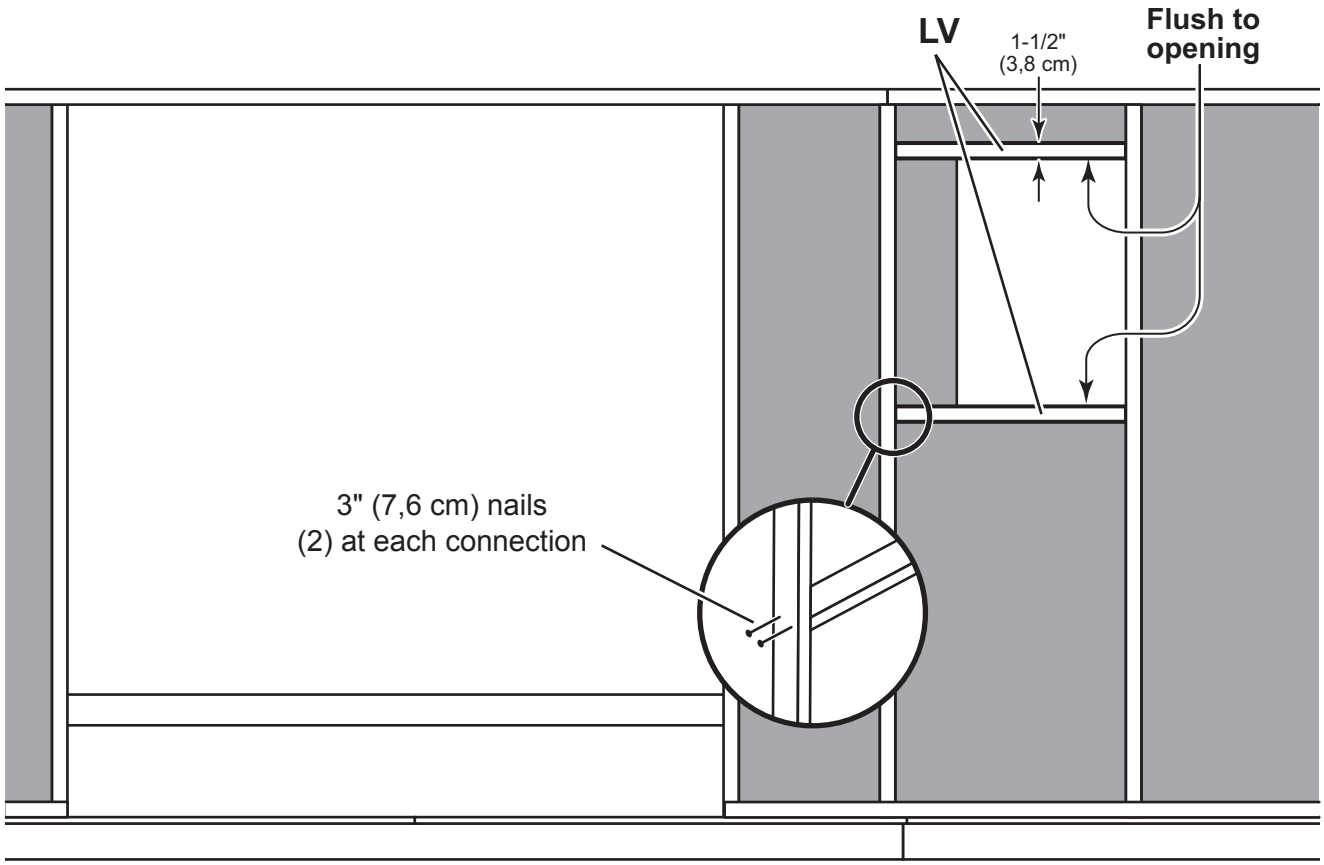

FRONT WALL

PARTS REQUIRED:

x1 **OT**
2 x 3 x 68" (5 x 7,6 x 173 cm)

x1 **RK**
2 x 3 x 13" (5 x 7,6 x 33 cm)

x4

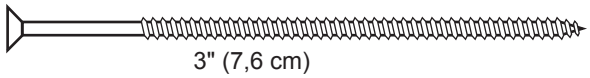

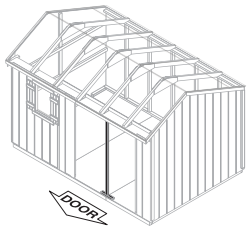

6 Remove temporary support in door opening.

7 Assemble **RK** to **OT** with one 3" (7,6 cm) screw **(Fig. A)**.

FINISH

8 Use **OT** and **RK** as a temporary brace to support top plate. Screw securely in place.

Fig. A

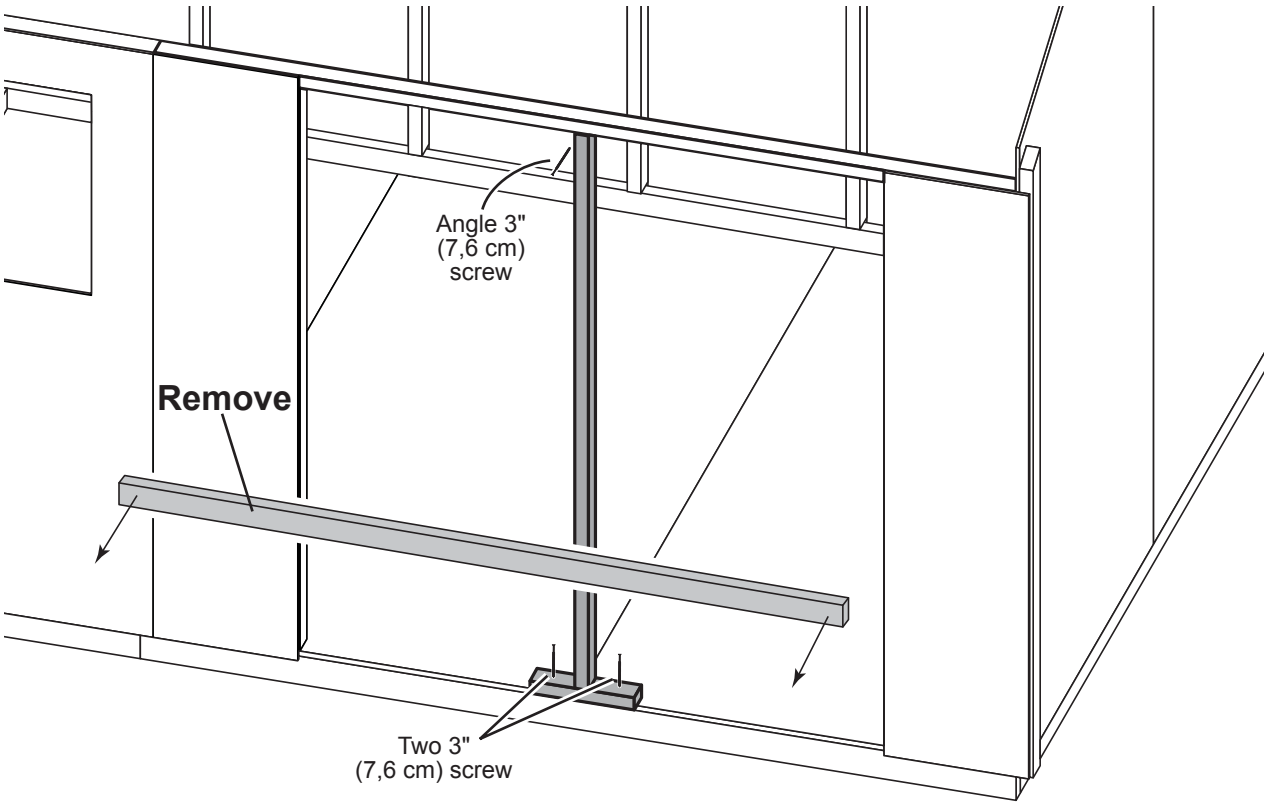

RAFTER JIG

PARTS REQUIRED:

x2 RK 2 x 3 x 13" (5 x 7,6 x 33 cm)

x1 3/8 x 5-3/8 x 5-1/2" (1 x 13,6 x 14 cm)

x3 3" (7,6 cm)

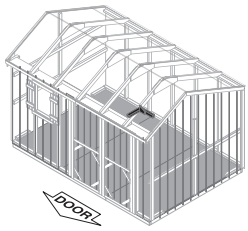

BEGIN

1. Make a rafter jig to make sure all rafters are assembled the same.
2. Measure from corner of backwall and **RK** (already installed) as shown.
3. Secure **RK** on the flat square to back wall at measurement using two 3" (7,6 cm) screws.

Attach a second **RK** on edge and 3/8" thick angle trim piece as shown **(Fig. A)**.

FINISH

4. You have finished building your rafter jig.

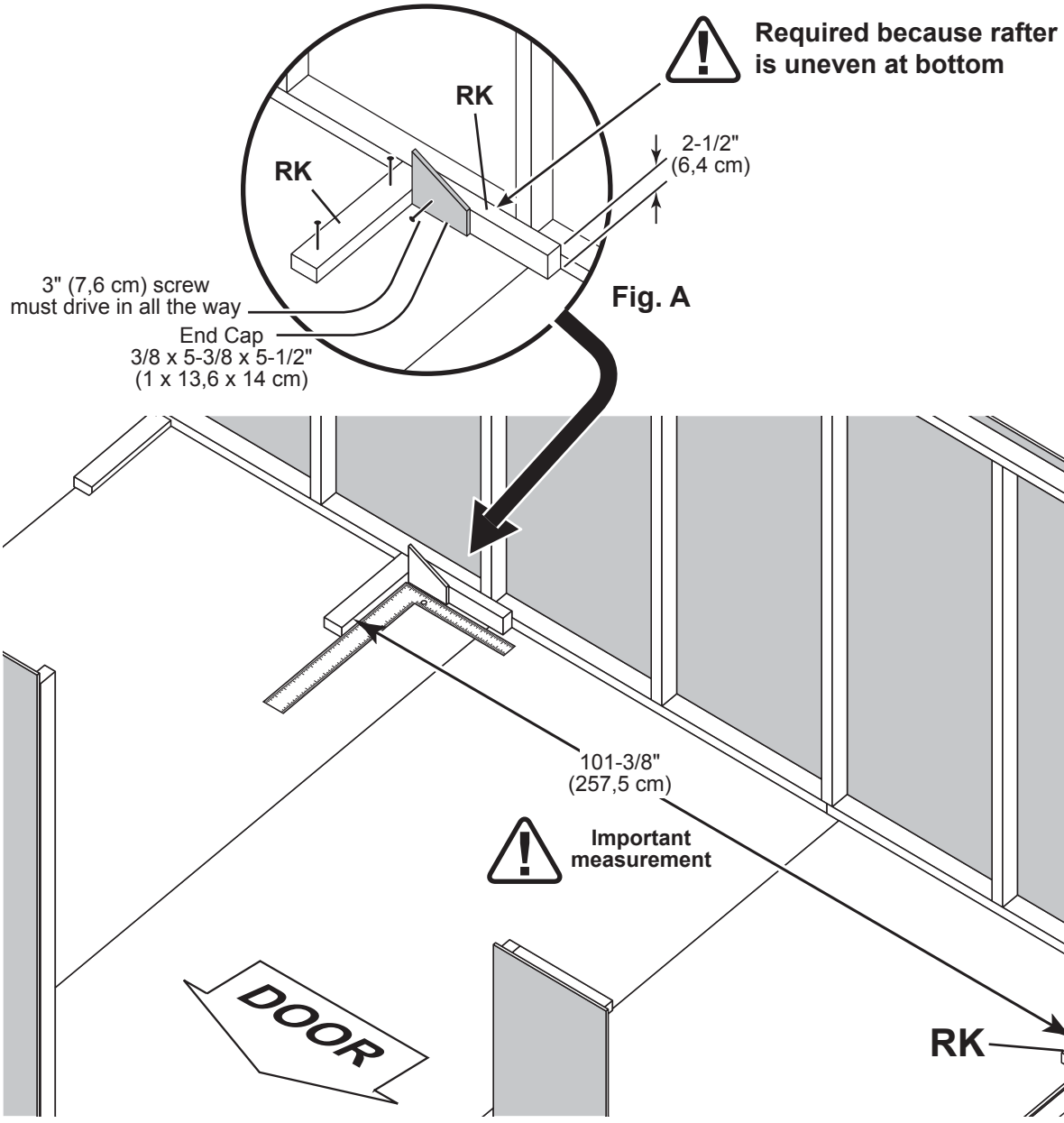

RAFTERS

PARTS REQUIRED:

x120 — 2" (5 cm)

x10 — 8 x 24" (20 x 61 cm) Gusset

x5 — AD — 2 x 4 x 65-5/8" (5 x 10 x 167 cm) Rafter

x5 — NU — 2 x 4 x 46-13/16" (5 x 10 x 119 cm) Rafter

BEGIN

1. You will assemble (5) rafters. Place rafter parts on Jig as shown.
2. Apply glue to rafters where the gusset will fit. Note short side of gusset. (**Fig. A**)
3. Ends of rafters must touch together at the peak. Nail gusset to rafters using twelve 2" nails in pattern shown.
4. Flip over rafter assembly and repeat **STEPS 2-3** to attach second gusset to other side.
5. Repeat **STEPS 1-4** to build **FOUR** additional rafter assemblies.

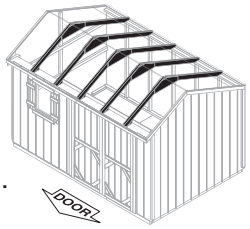

FINISH

6. You have finished building your rafters.

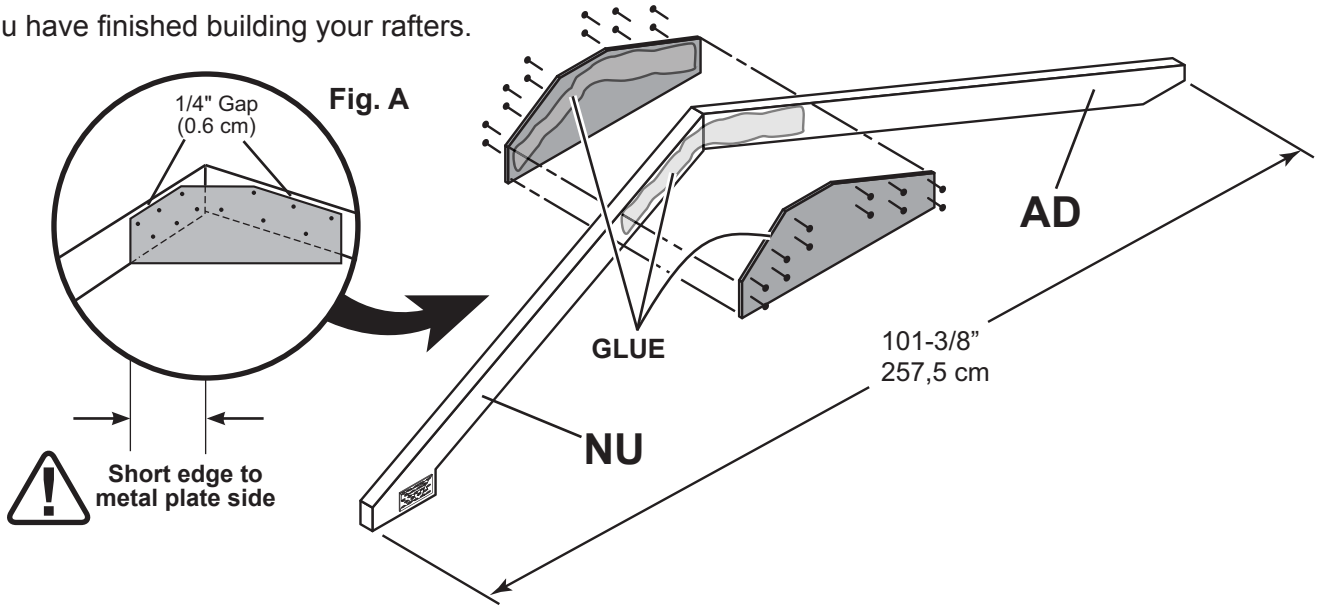

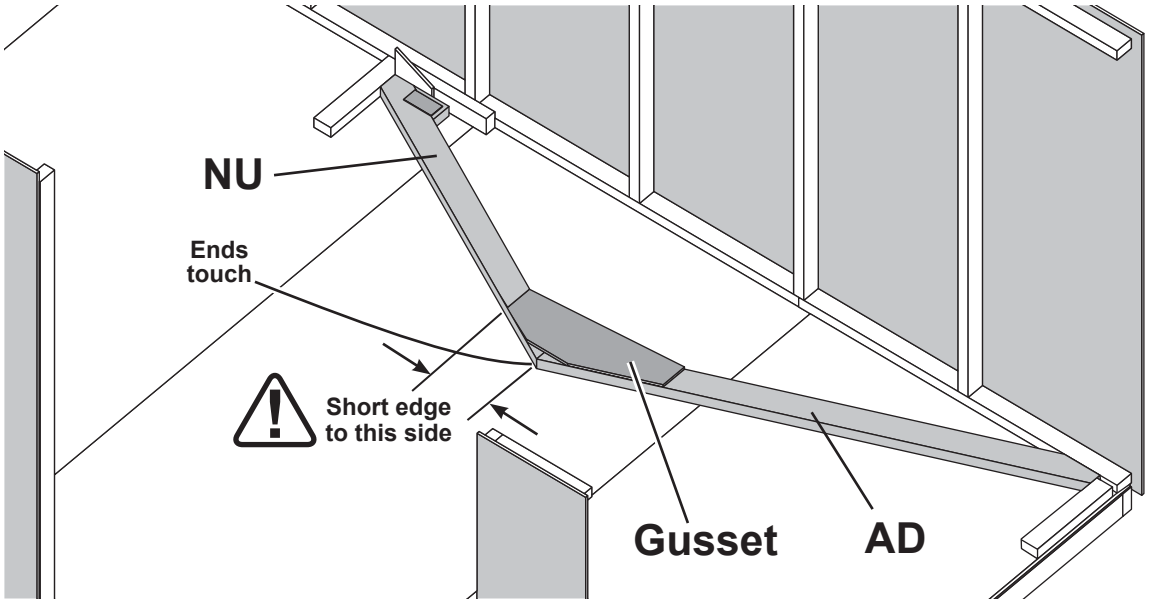

TRIM CAPS

PARTS REQUIRED:

x2 2-5/8 x 5-3/8 x 5-1/2" (6,6 x 13,6 x 14 cm) 1 Left / 1 Right

x4 1-1/4" (3,2 cm)

BEGIN

1 Attach primed side out and flush with soffit, using two 1-1/4" (3,2 cm) screws on both sides, as shown.

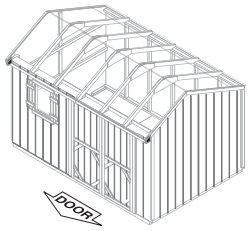

Install with primed side facing out.

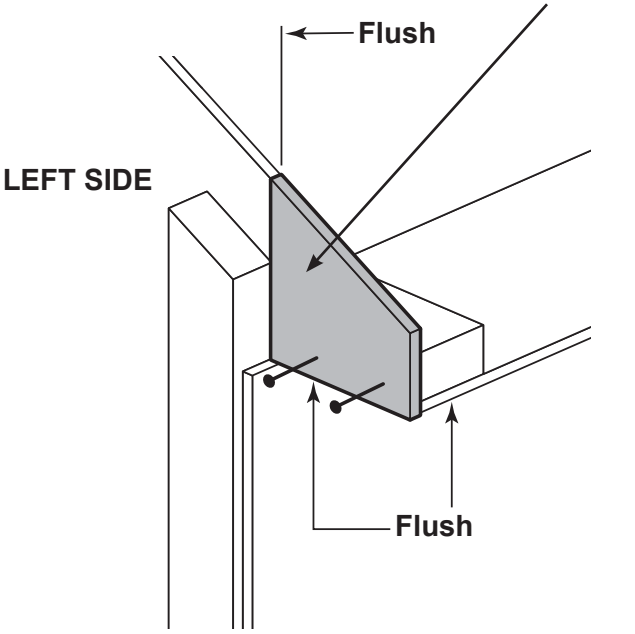

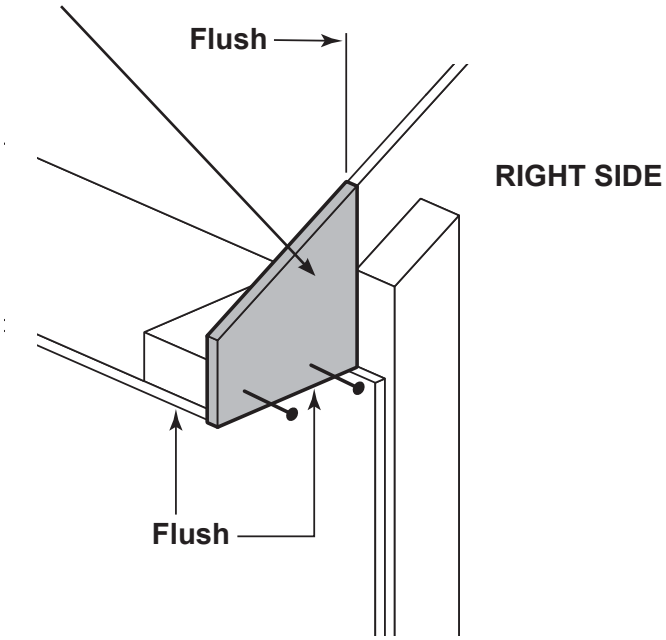

FINISH

2 You have finished your trim caps.

TRIM

PARTS REQUIRED:

x2 NR
2 x 3 x 65" (5 x 7,6 x 165 cm)

x16 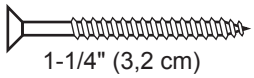
1-1/4" (3,2 cm)

BEGIN

1 Install the back trim first, flush to back panel, trim, and panel edge as shown.

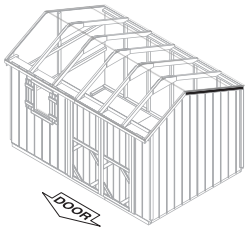

2 Secure using eight 1-1/4" (3,2 cm) screws 9" apart from inside shed.

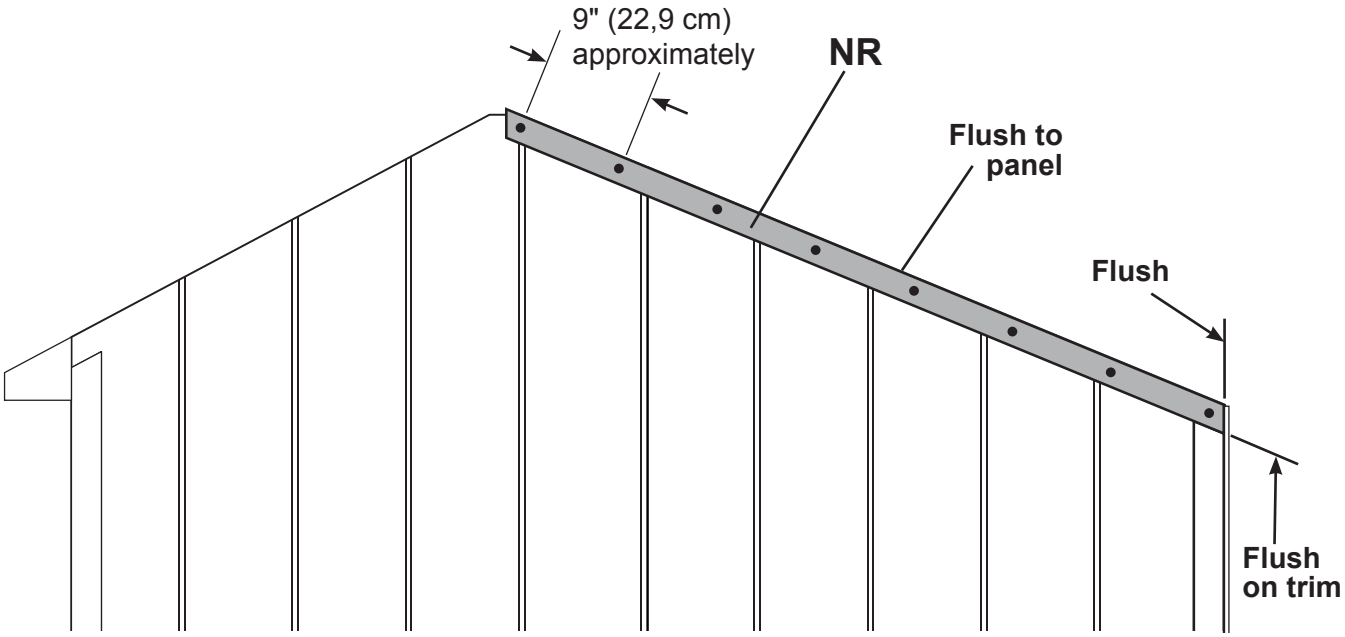

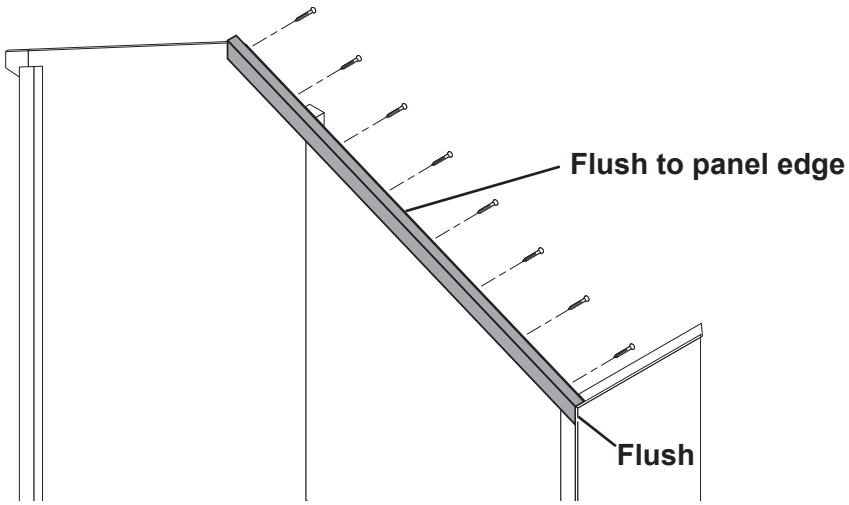

TRIM

PARTS REQUIRED:

x4 NQ
2 x 3 x 46-7/8" (5 x 7 x 119 cm)

x12
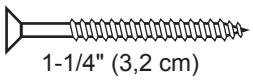
1-1/4" (3,2 cm)

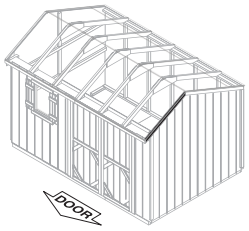

3 Install the front trim, flush to peak and panel edge as shown.

4 Secure using six 1-1/4" (3,2 cm) screws from inside shed.

5 Repeat Steps for opposite Side Wall.

FINISH

6 You have finished attaching your Trim. Proceed to installing your Rafters.

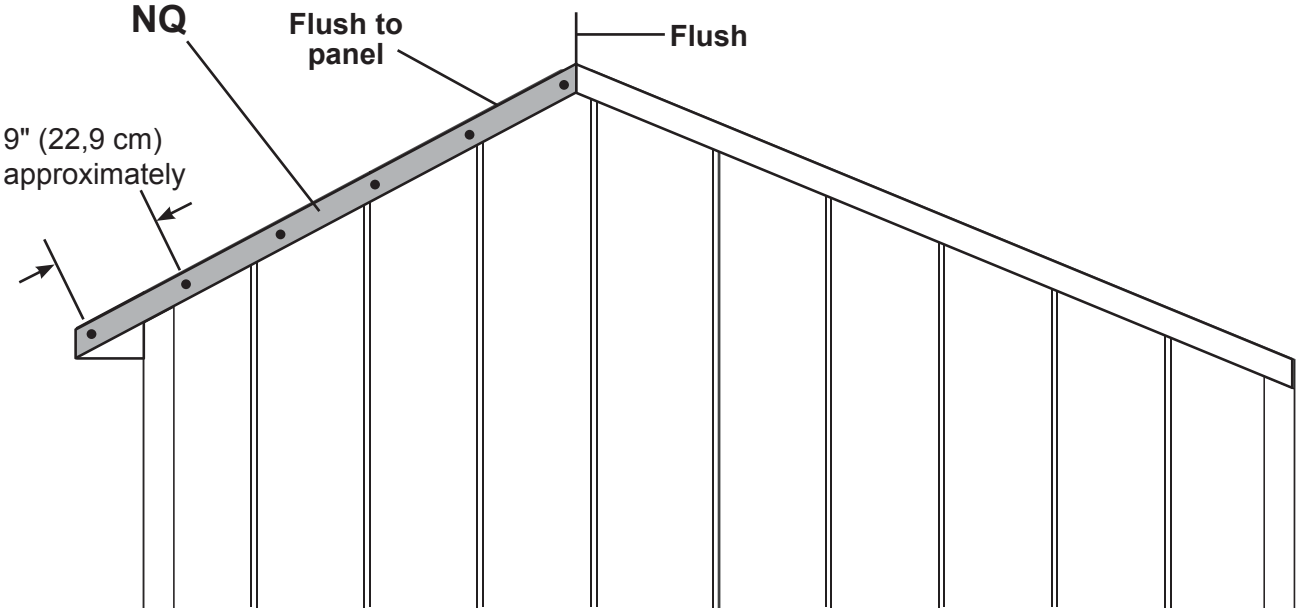

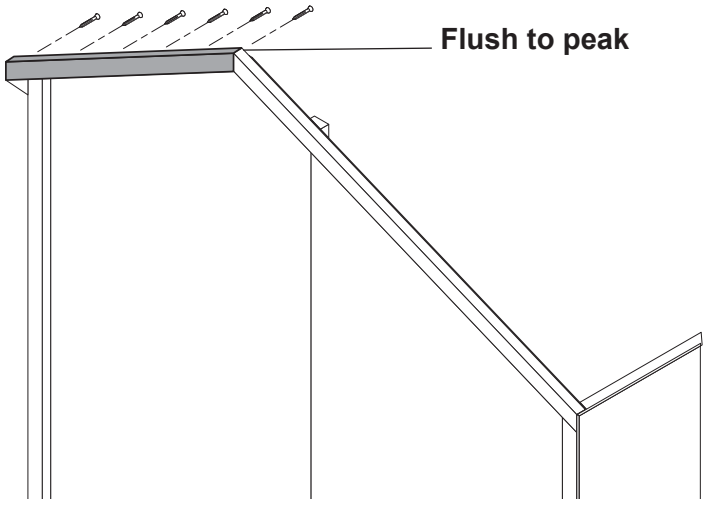

ROOF

PARTS REQUIRED:

x15 2" (5 cm)

x20 3" (7,6 cm)

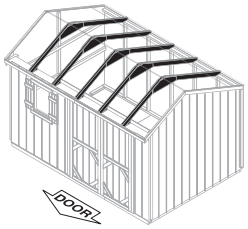

BEGIN

1. Mark top of wall frames to measurement shown.
2. Locate Rafter centered on marks.
3. Hold rafter end flush to back wall and overhang. Secure from under overhang using two 2" (5 cm) screw. (**Fig. A**)
4. Secure opposite end through panel into rafter end using one 2" (5 cm) screw (**Fig. B**)
5. Screw rafters at each end using two 3" (7,6 cm) screws as shown. (**Fig. B, C**)
6. Repeat steps to attach 5 rafters.

FINISH

7. You have attached your rafters. Proceed to attaching your soffit trim.

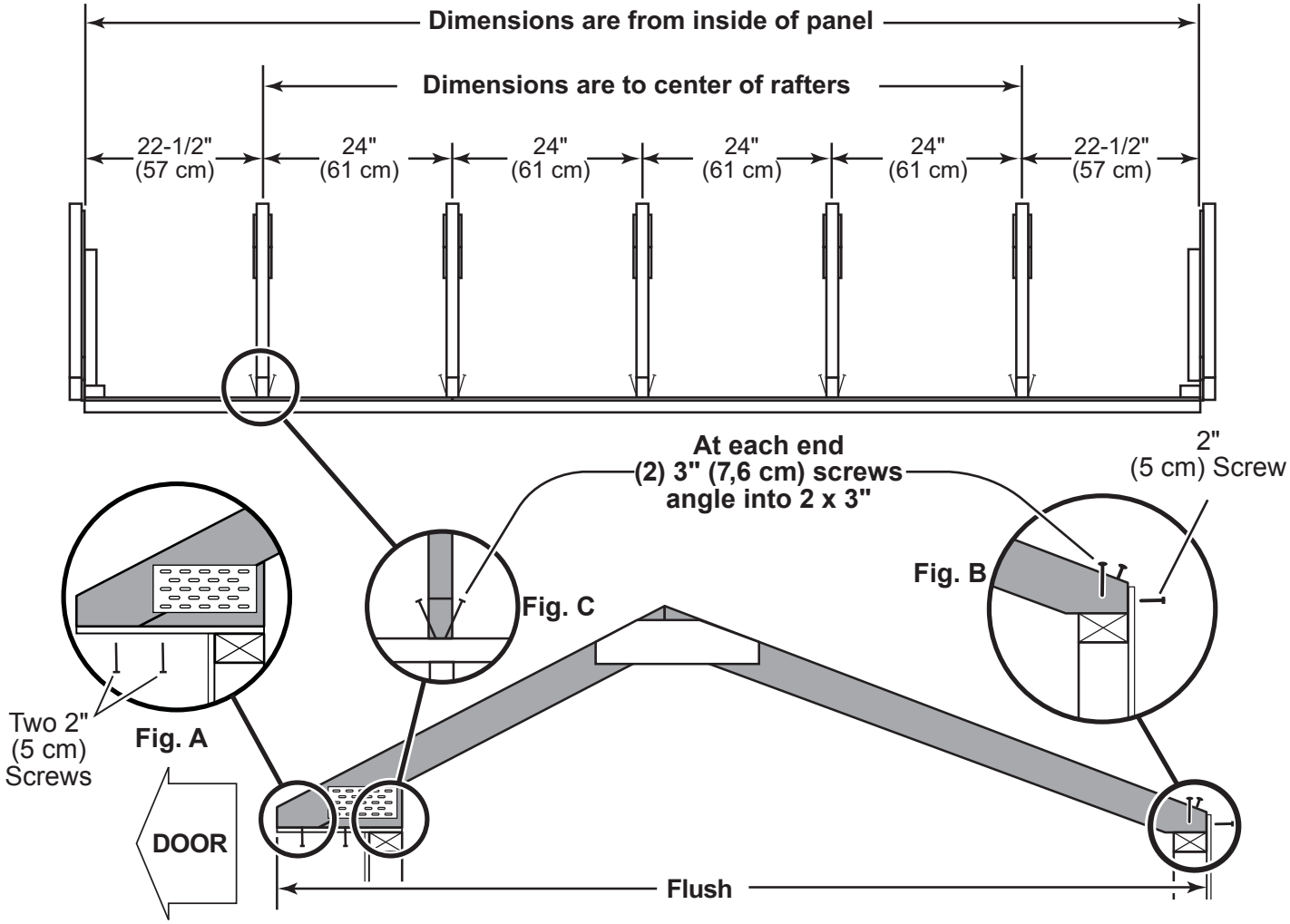

TRIM

PARTS REQUIRED:

x16 — 2" (5 cm)

☐ x2 **KY**
3/4 x 2-1/2 x 72-3/8" (1,9 x 6,3 x 184 cm)

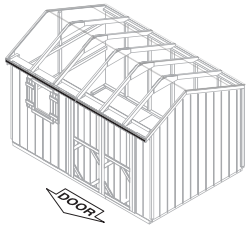

BEGIN

1. Orient parts as shown and attach to ends of rafters, using two 2" (5 cm) finish nails **(Fig. A)**.
2. Trim is flush at ends to sidewall trim.

FINISH

3. You have finished your soffit trim.

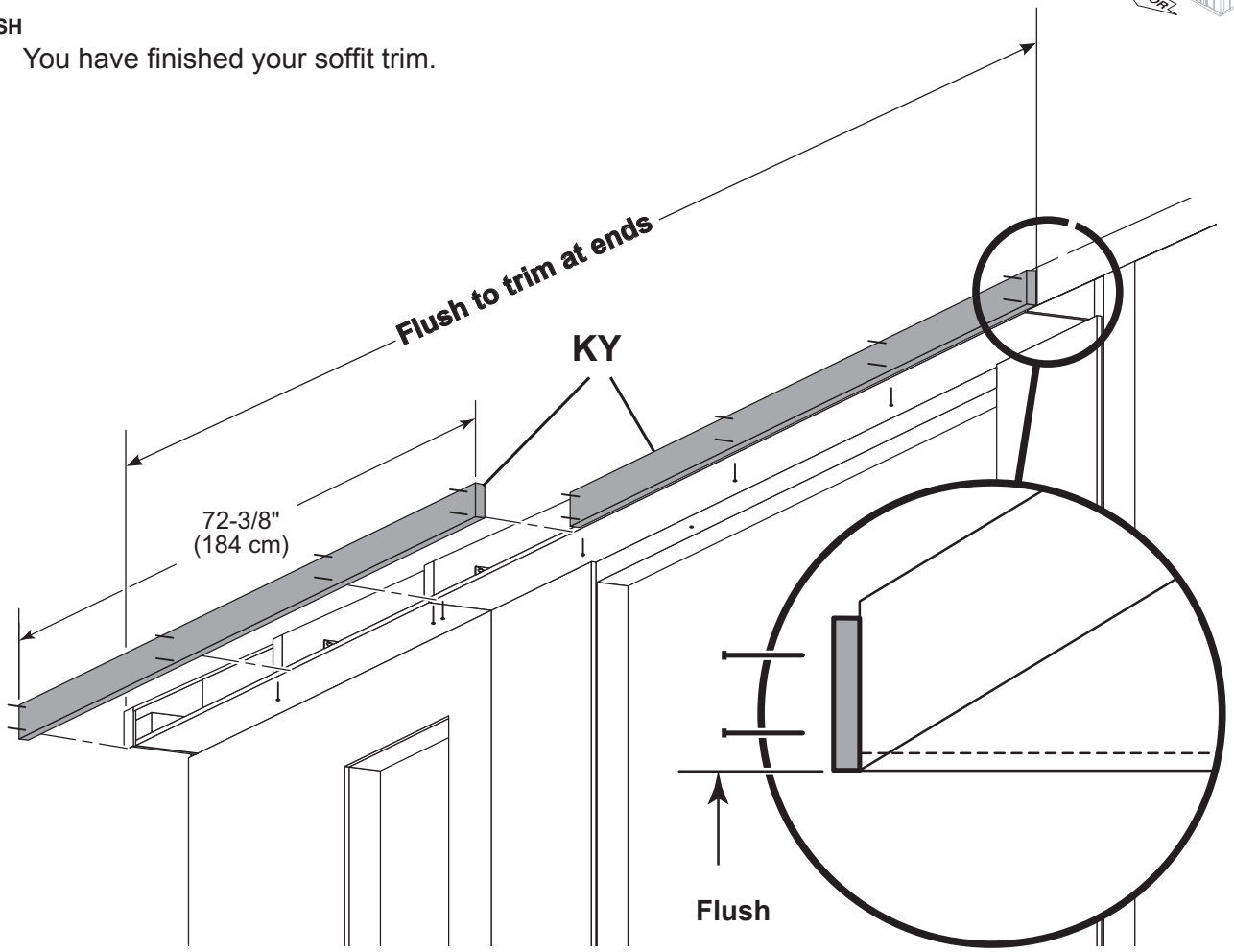

Fig. A

DOOR SUPPORT

PARTS REQUIRED:

x22

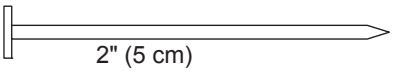

x1

5/8 x 3-7/8 x 96" (1,6 x 9,8 x 244 cm)

BEGIN

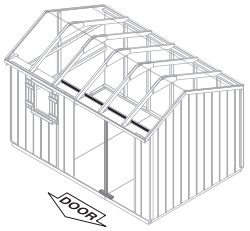

1. Use exterior-rated wood glue behind support. Apply to top plate and end of rafter
2. Position support flush with bottom edge of top plate and side wall panel and attach with 2" (5 cm) nails as shown.
3. Remove temporary brace after support is installed.

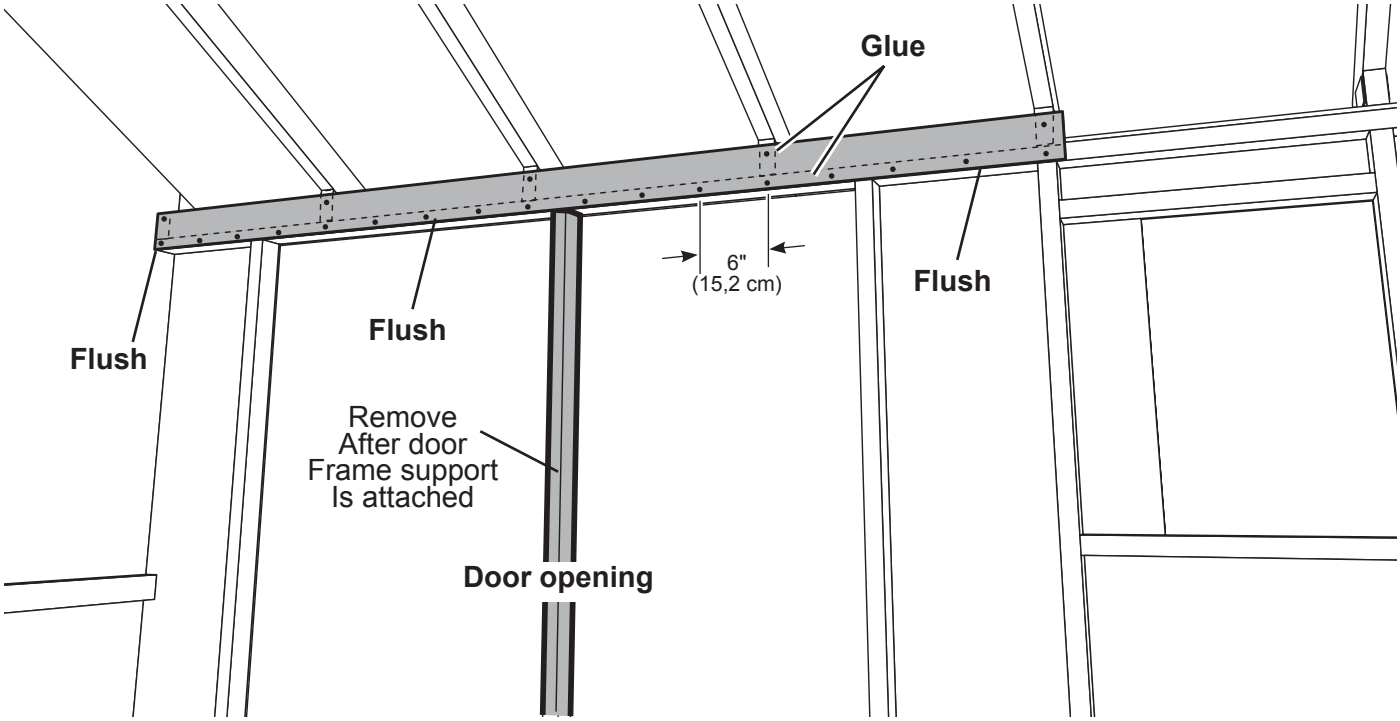

FINISH

4. You have finished your door frame support.

WORKBENCH

PARTS REQUIRED:

x10

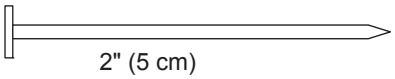

2" (5 cm)

x1

7/16 x 20 x 96" (1,1 x 51 x 244 cm)

x1 **PT**

2 x 3 x 96" (5 x 7,6 x 244 cm)

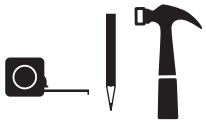

BEGIN

1 Position bench top to **PT** flush at ends and maintaining 1/4" (6 mm) overhang, as shown **(Fig. A)**.

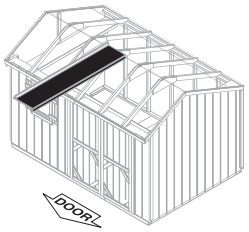

2 Attach with 2" (5 cm) nails as shown.

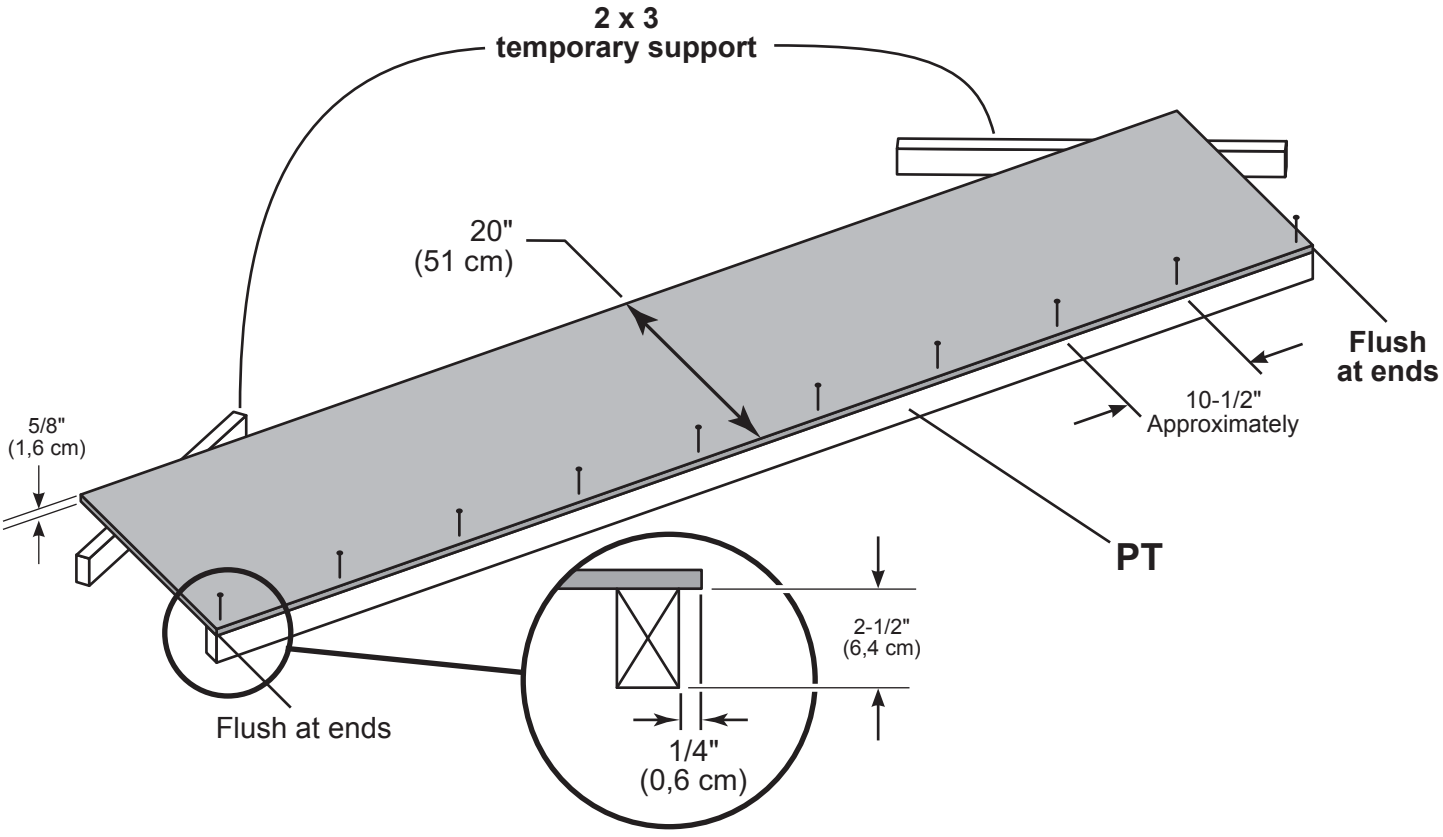

Fig. A

FINISH

3 You have finished building your workbench top.

SHELVES

PARTS REQUIRED:

x10

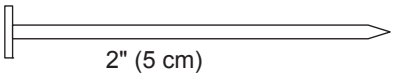

2" (5 cm)

x2

7/16 x 11-3/4 x 96" (1,1 x 30 x 244 cm)

x2 **PT**

2 x 3 x 96" (5 x 7,6 x 244 cm)

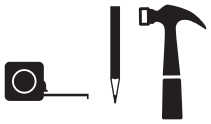

BEGIN

1. You will build two shelves. Position shelf to **PT** flush at ends and maintaining 1/4" (6 mm) overhang, as shown **(Fig. A)**.

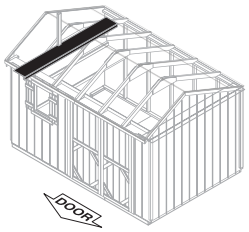

2. Attach with 2" (5 cm) nails as shown. Repeat steps to build second shelf.

FINISH

3. You have finished building your shelves.

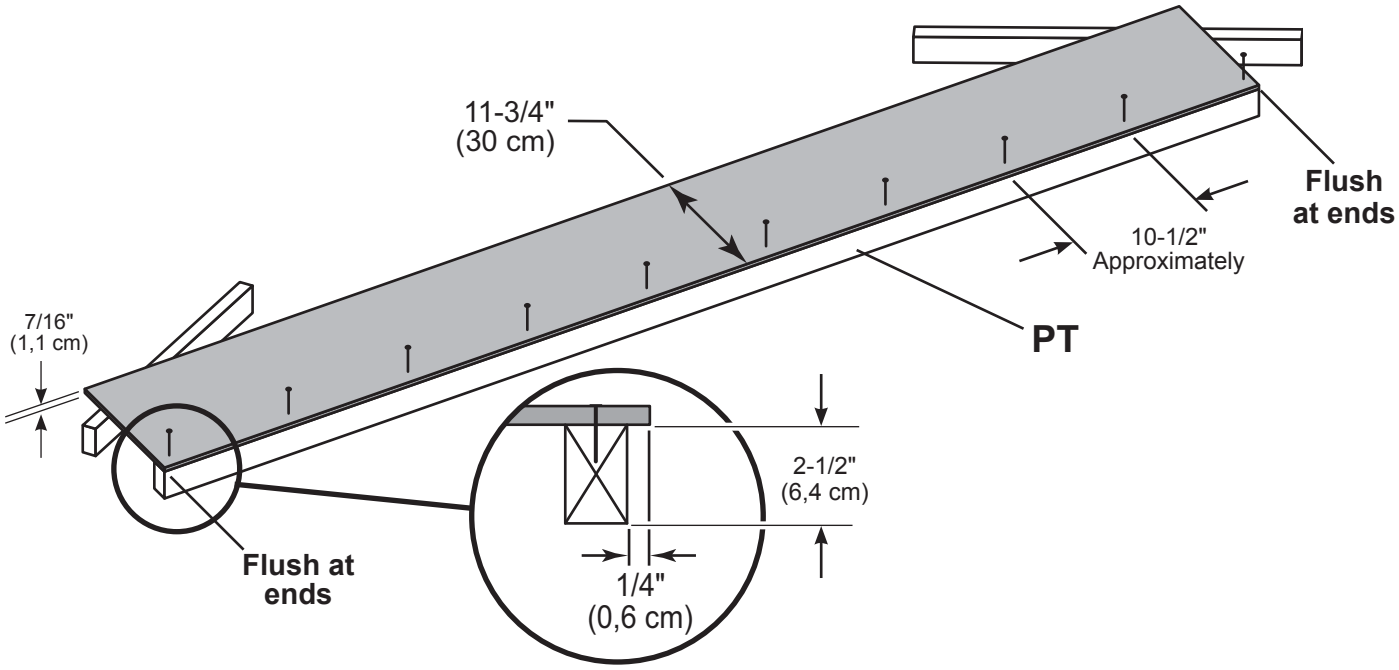

Fig. A

PEGBOARD

PARTS REQUIRED:

x13 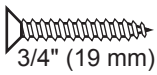
3/4" (19 mm)

x1 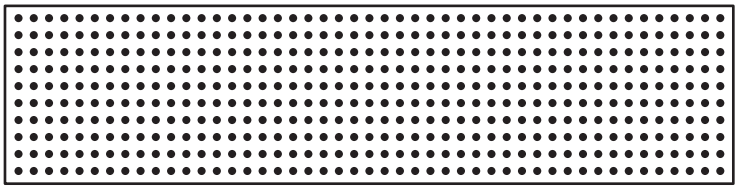
23-7/8 x 96" (61 x 244 cm) Peg Board

x1 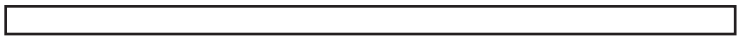
1 x 3 x 96" (2,5 x 7,6 x 244 cm)

BEGIN

1. Position pegboard to 1 x 3" flush at ends and edge, as shown (**Fig. A)**.

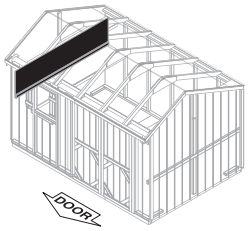

Rough side up

2. Attach with 3/4" (19 mm) screws as shown.

FINISH

3. You have finished building your pegboard.

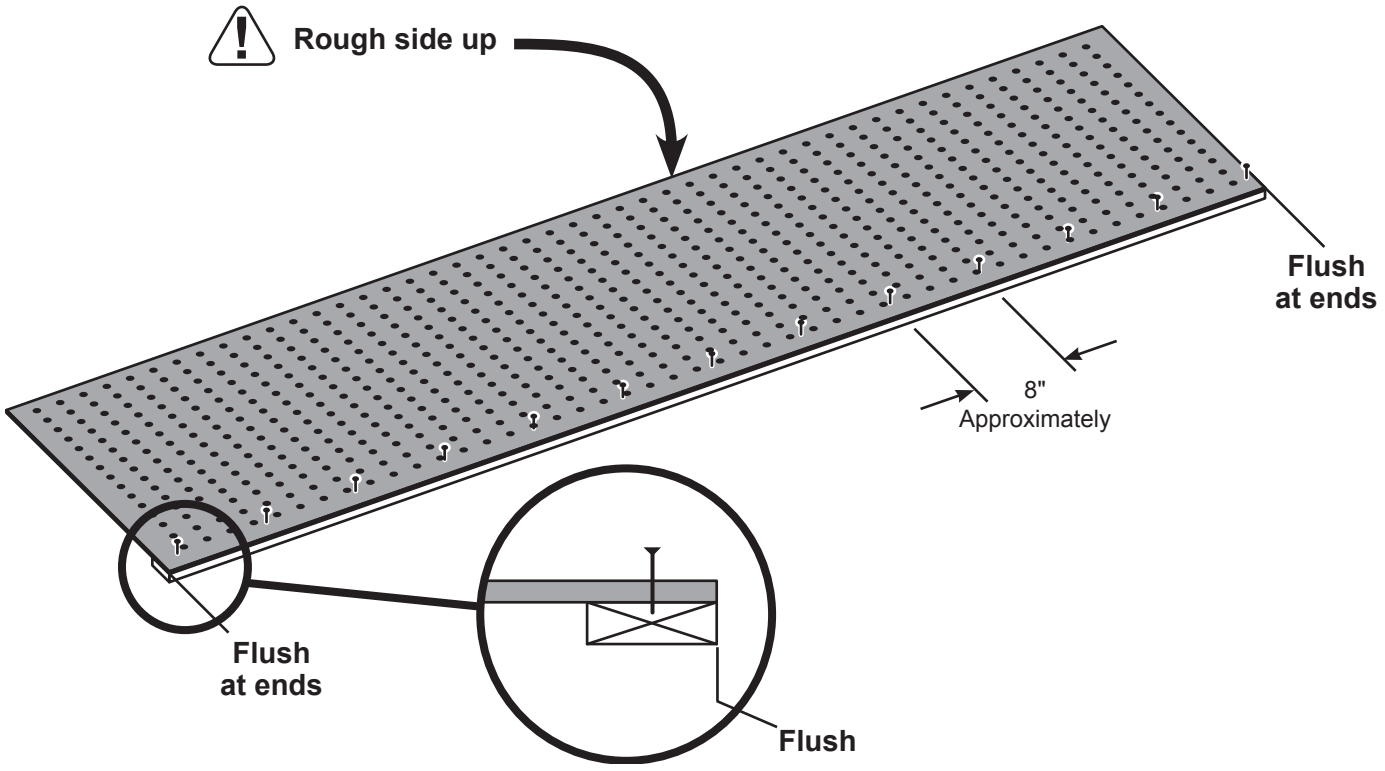

Fig. A

WORKBENCH

PARTS REQUIRED:

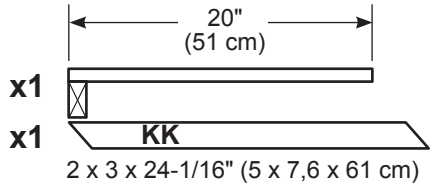

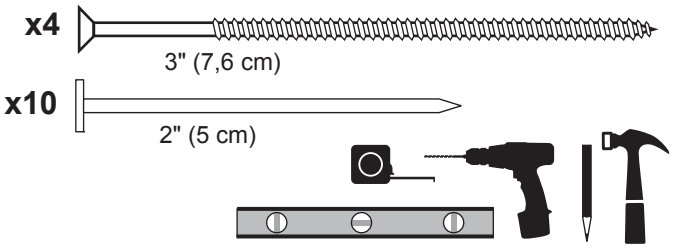

BEGIN

1. Place workbench into gap in side wall upright. Nail using 2" (5 cm) nails, as shown.

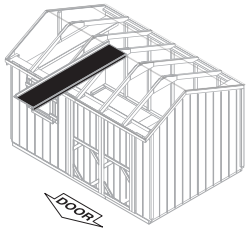

2. Level and attach **KK** to upright and workbench, using four 3" (,6 cm) screws as shown **(Fig. A)**.

FINISH

3. You will secure your workbench ends later. Proceed to attach your pegboard.

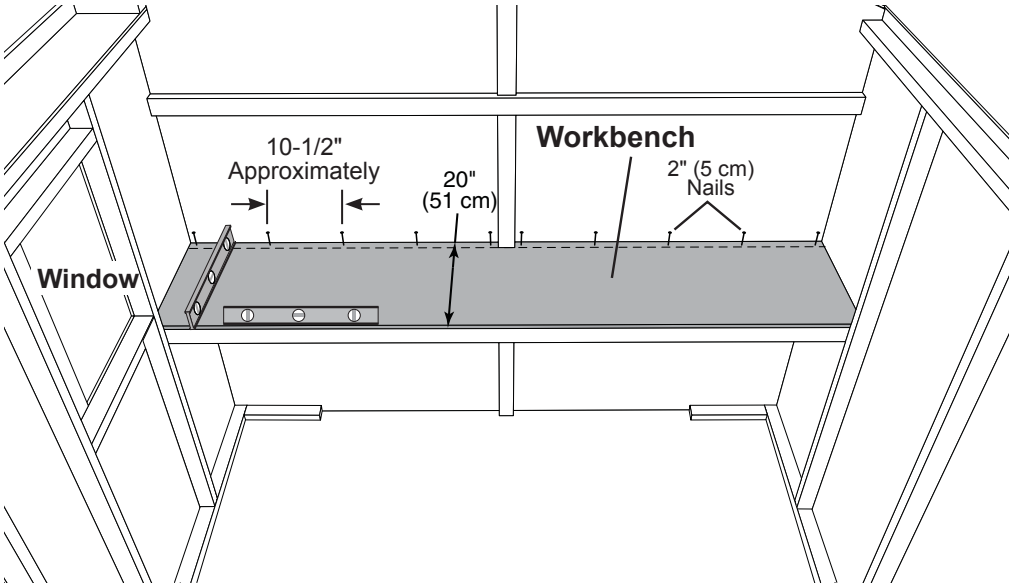

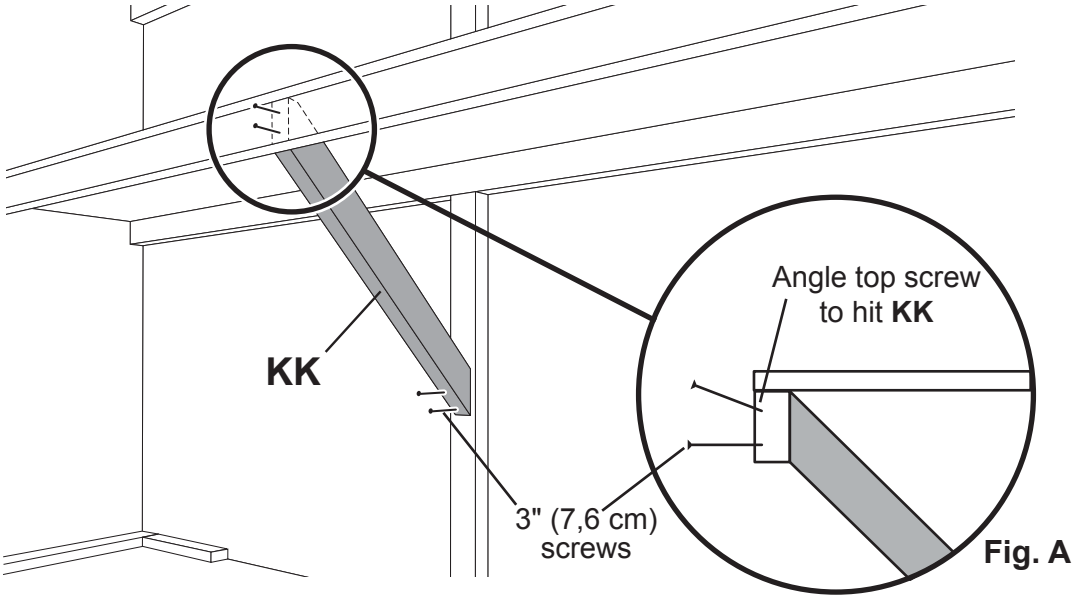

Fig. A

PEGBOARD

PARTS REQUIRED:

x1 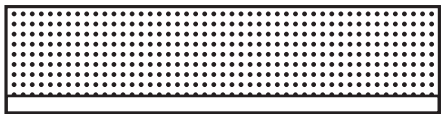

x2 RK 2 x 3 x 13" (5 x 7,6 x 33 cm)

x4

x1 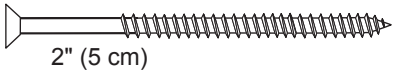

x13 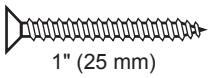

BEGIN

1. Attach **RK** at back corner of workbench into outside trim, using 3" (7,6 cm) screws, as shown.

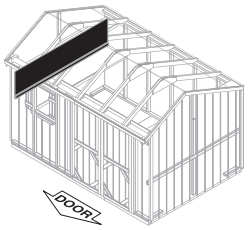

2. Place pegboard onto workbench with 1 x 3 Trim to bottom, facing out.
3. Attach pegboard at top using (13) 1" (25 mm) screws as shown.
4. Anchor bottom of pegboard, using one 2" (5 cm) screw at center, and 3" (7,6 cm) screws at lower corners.

FINISH

5. You have finished your pegboard. Proceed to attach your shelf.

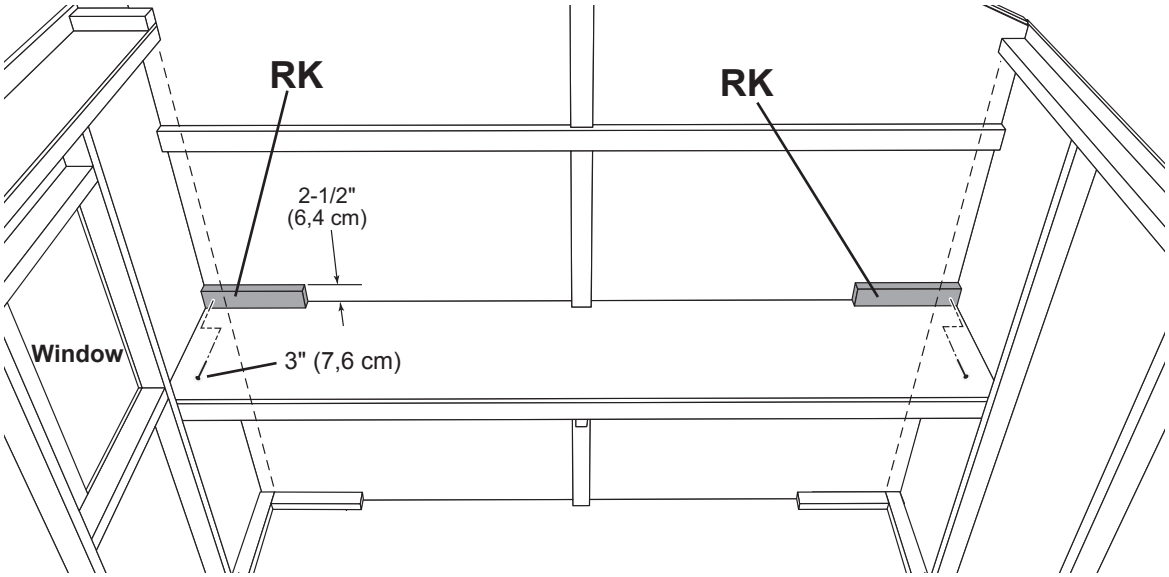

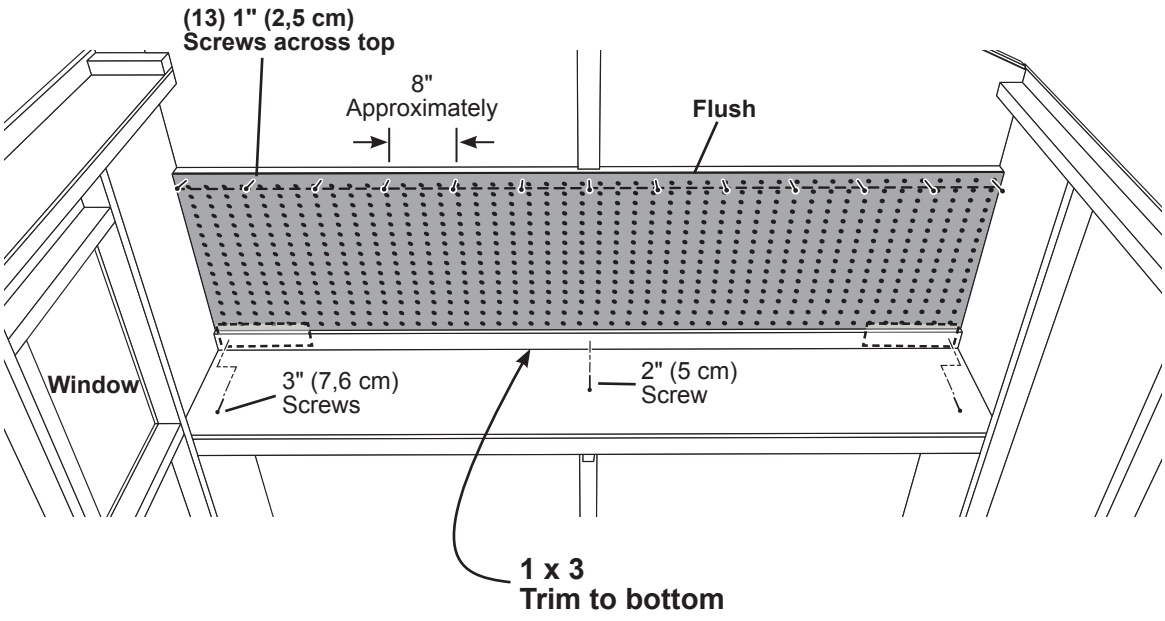

SHELVES

PARTS REQUIRED:

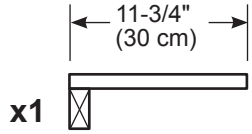

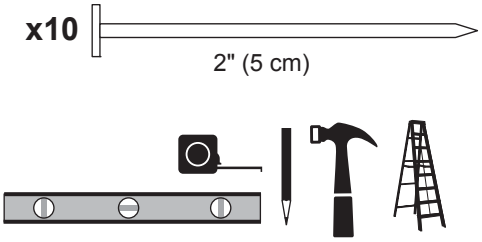

BEGIN

1 Place shelf into gap in side wall upright. Attach using 2" (5 cm) nails, as shown.

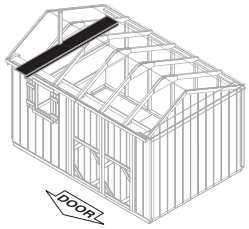

2 You will screw the ends of workbench and shelf from outside of shed.

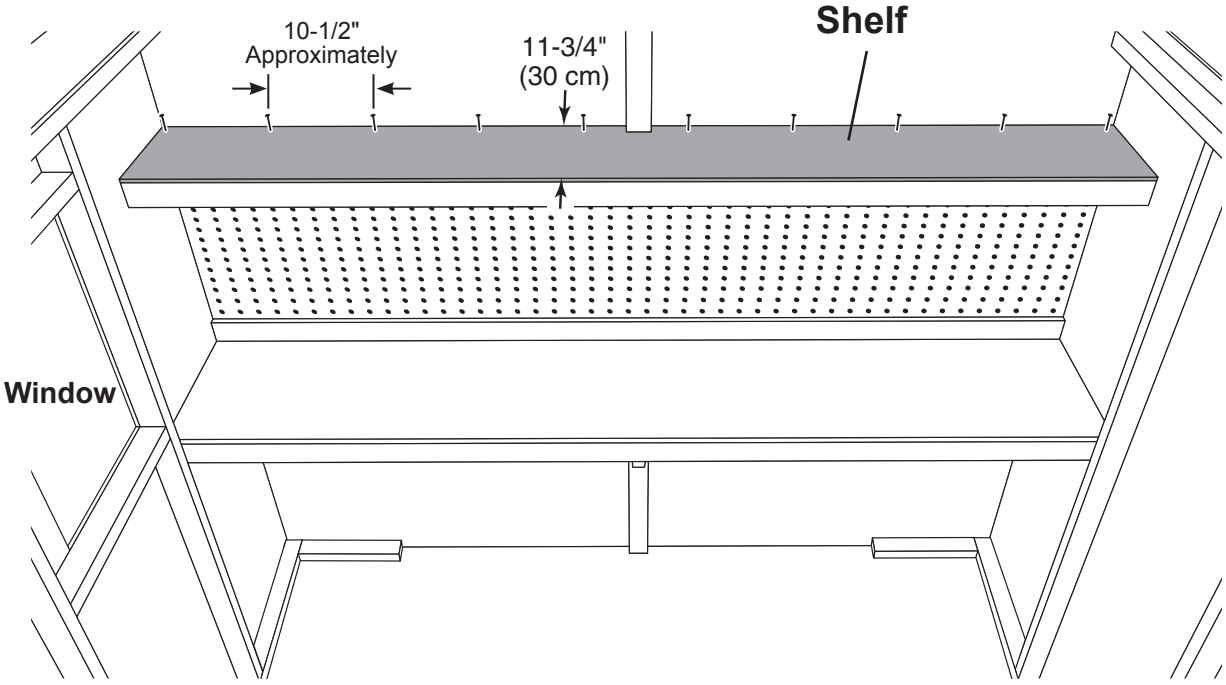

SHELVES

PARTS REQUIRED:

x8

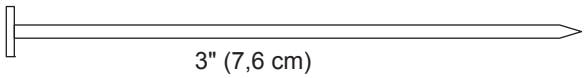

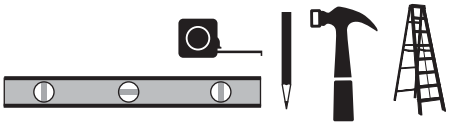

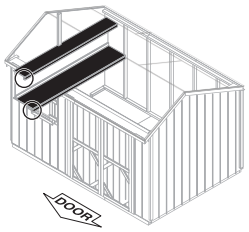

3 Measure and mark outside nail locations for workbench and shelf on back wall as shown.

4 Assistance may be required to hold shelf and workbench level.

FINISH

5 Nail through marks on wall panel into ends of workbench and shelf supports.

Repeat procedure at opposite ends of shelf and workbench.

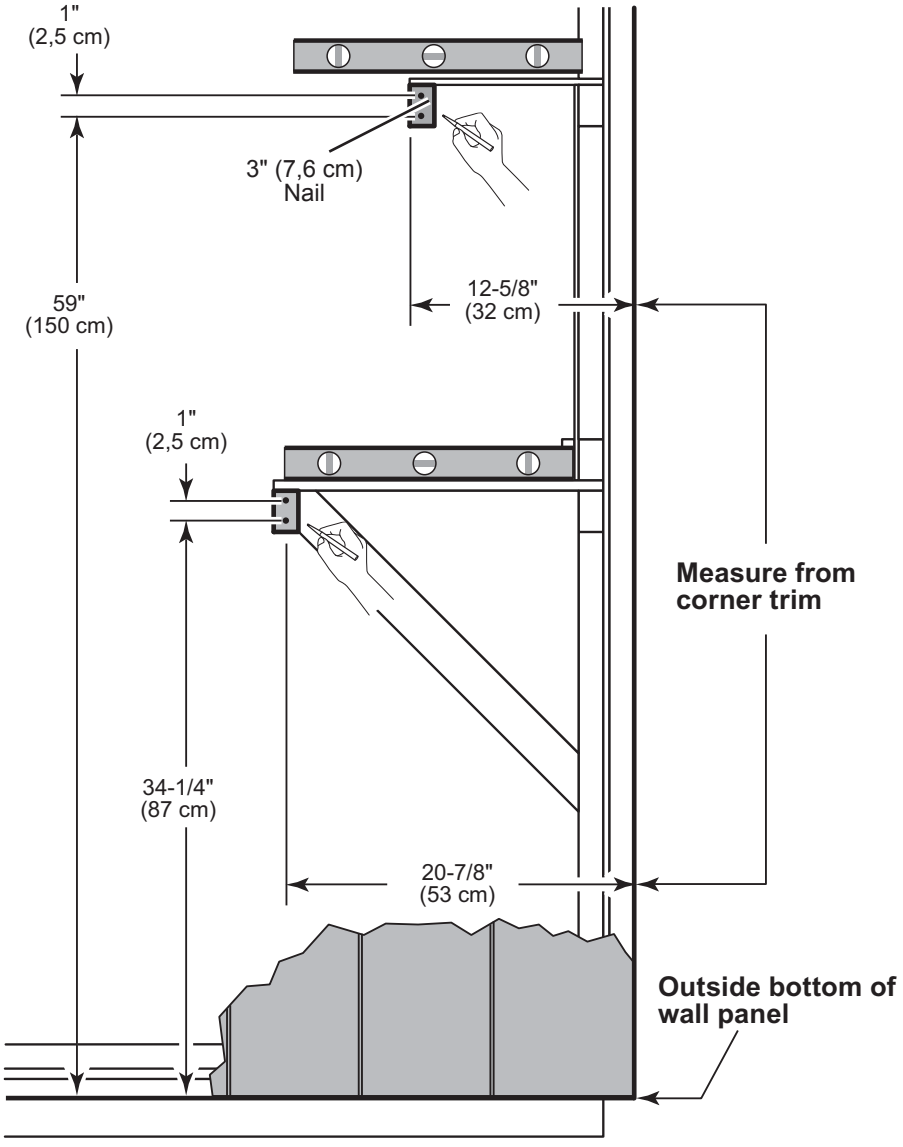

SHELVES

PARTS REQUIRED:

x6 — 1-1/4" (3,2 cm)

x4 — 3" (7,6 cm)

x2 — 3" (7,6 cm)

x1 — 11-3/4" (30 cm)

x1 — RK — 2 x 3 x 13" (5 x 7,6 x 33 cm)

BEGIN

1. Install **RK** flush against top plate and outer wall panel. Attach using 3" (7,6 cm) screws, as shown **(Fig. A)**.

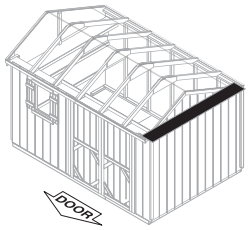

2. Place shelf into gap in side wall upright. Attach using 1-1/4" (3,2 cm) screws from underneath, as shown.

3. From outside shed, nail through the wall panel into end of shelf using two 3" (7,6 cm) nails.

You an easily locate nails looking over wall.

FINISH

4. You have finished installing your shelf. Proceed to building your roof.

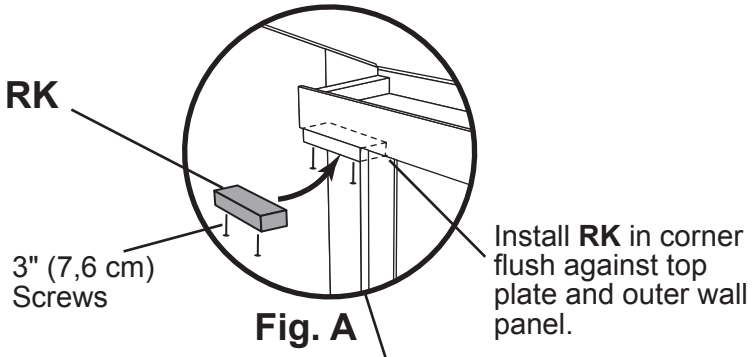

Fig. A

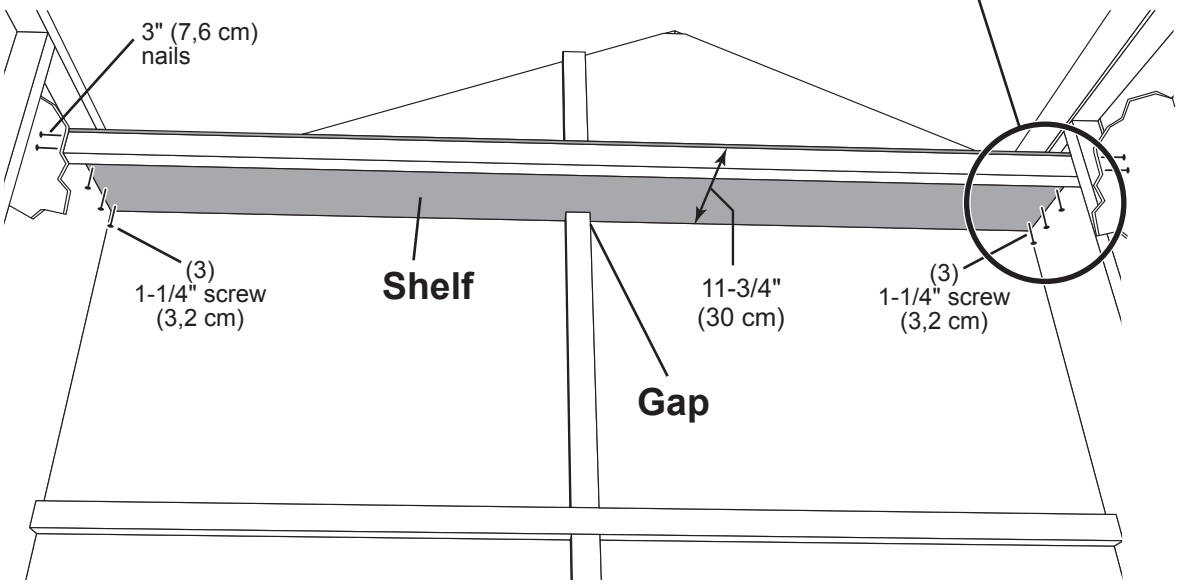

ROOF PANELS

PARTS REQUIRED:

x1 — 7/16 x 48 x 96" (1,1 x 122 x 244 cm)

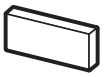

3/4" GAUGE BLOCK

x4 — 2" (5 cm)

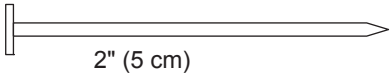

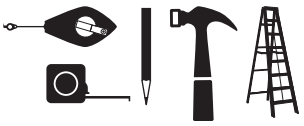

Roof panels may cause serious injury until securely fastened.

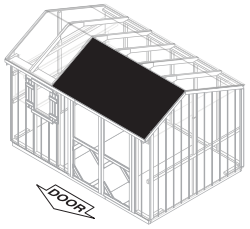

BEGIN

1 You must square the roof by attaching one panel fist. You will use the panels' long edge as a lever to bring your roof into square. Commonly known as "racking".

2 Attach the **48 x 96"** panel with the rough side up (painted-grid lines side) with a 3/4" measurement on the rafter **(Fig A)** and the panel flush at the peak **(Fig. B)**.

Secure panel with two 2" nails in the corners.

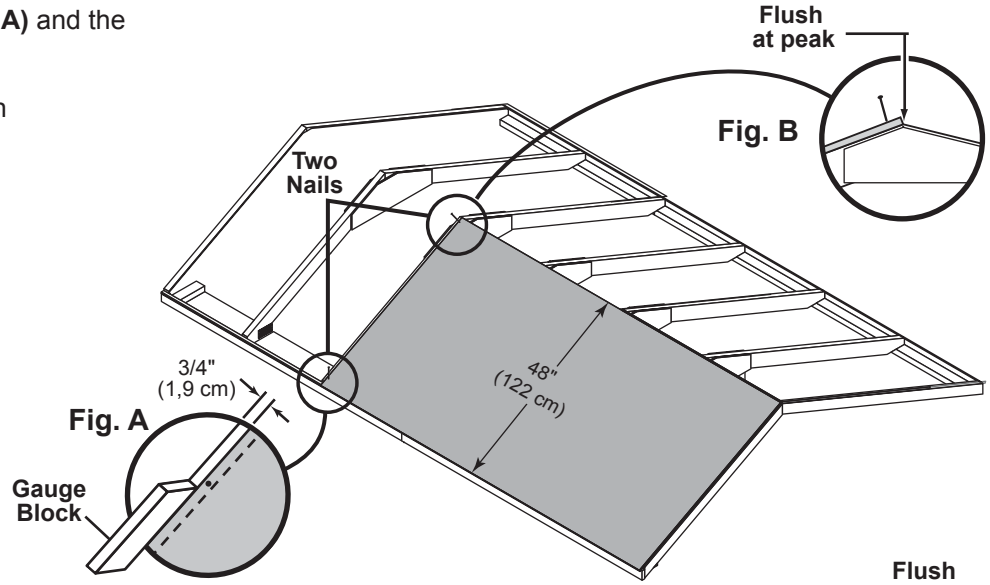

3 Move to the opposite end. Using the long edge of the panel as a lever move the panel side-to-side until the top corner is flush to the peak **(Fig. C)** and there is 3/8" measurement to the gable trim **(Fig. D)**.

You may need to move your sidewall to get the 3/8" measurement. Secure panel with two 2" nails in the corners.

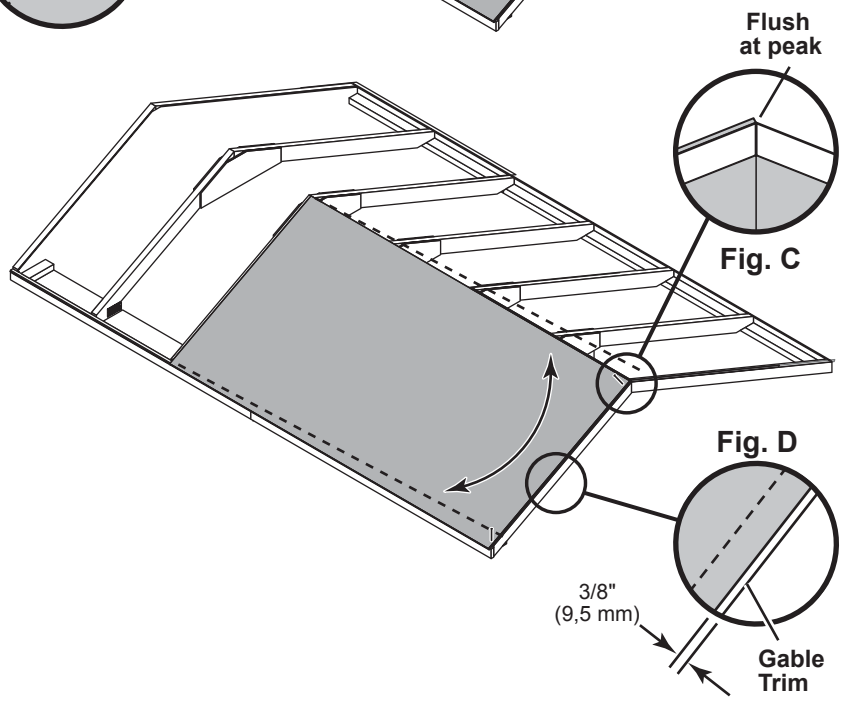

ROOF PANELS

PARTS REQUIRED:

x108

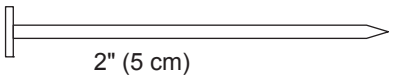

2" (5 cm)

x2

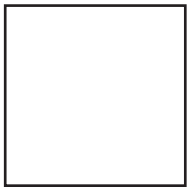

7/16 x 47-7/8 x 48"
(1,1 x 122 x 122 cm)

x1

7/16 x 48 x 96"
(1,1 x 122 x 244 cm)

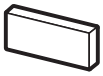

3/4" GAUGE BLOCK

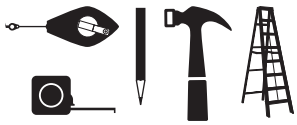

4 Keep spacing between the center of the rafters at the lower edge of the panel and secure with one 2" nail into each rafter **(Fig. E)**.

Move to the top of the panel and keep spacing between the center of the rafters. Secure with one 2" nail into each rafter **(Fig. E)**.

Nail the roof panel using 2" nails 6" apart on edges and 12" apart inside panel.

Attach **47-7/8 x 48"** roof panel flush to first panel, flush at peak and with the 3/8" measurement on trim **(Fig. F, G)**.

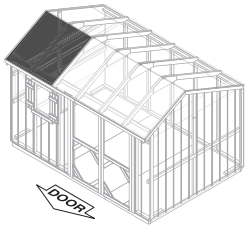

Fig. E

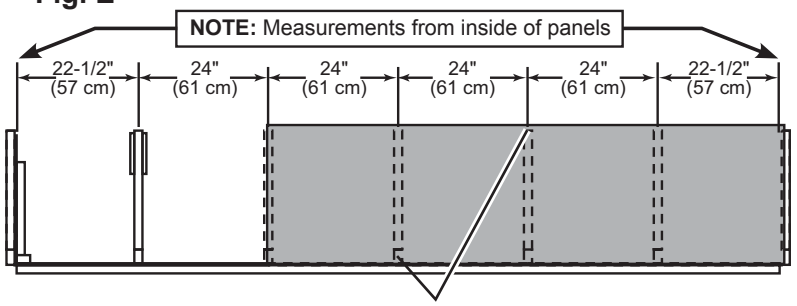

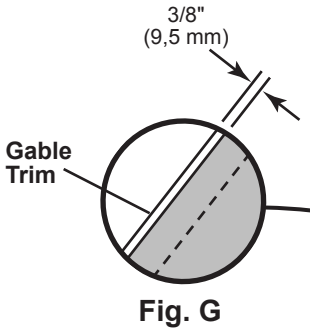

Fig. G

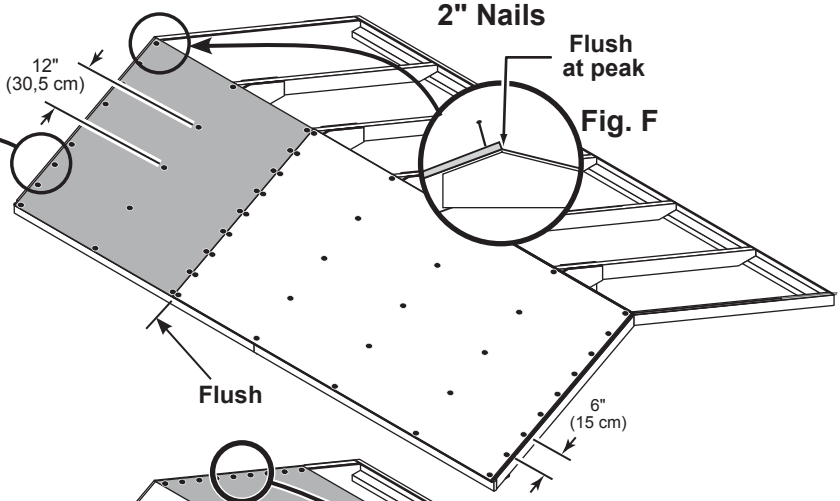

Fig. F

5 Move to the opposite side of the roof and repeat this process installing a 48 x 96" and 47-7/8 x 48" panel.

Note the panels edges are offset from the first panels installed.

Make sure panels are flush at the peak **(Fig H)** and there is a 3/8" measurement at the gable trims **(Fig. J)**.

Nail the roof panel using 2" nails 6" apart on edges and 12" apart inside panel.

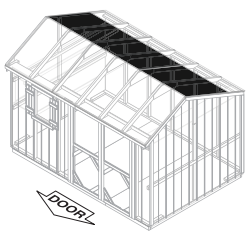

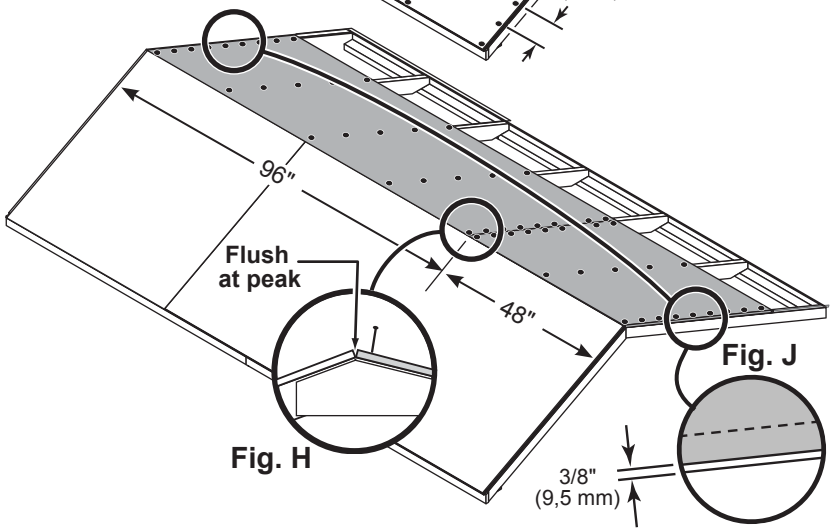

Fig. H

Fig. J

ROOF PANELS

PARTS REQUIRED:

x28 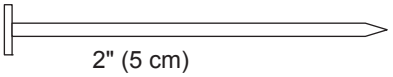
2" (5 cm)

x1
7/16 x 18 x 96” (1,1 x 46 x 244 cm)

x1
7/16 x 18 x 48" (1,1 x 46 x 122 cm)

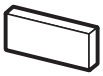
3/4" GAUGE BLOCK

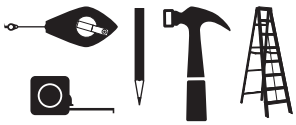

6 Attach **18 x 96"** panel as shown flush to panels and 3/4" on rafter **(Fig. A)** and with 3/8" at the gable trim **(Fig. B)**.

Attach **18 x 48"** roof panel flush to panels and with the 3/8" measurement on trim **(Fig. B)** and with 3/8" at the gable trim **(Fig. C)**.

Nail the roof panels using 2" nails 6" apart on edges and 12" apart inside panel.

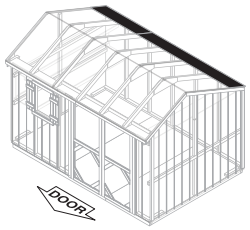

FINISH

7 You have finished installing your roof panels.

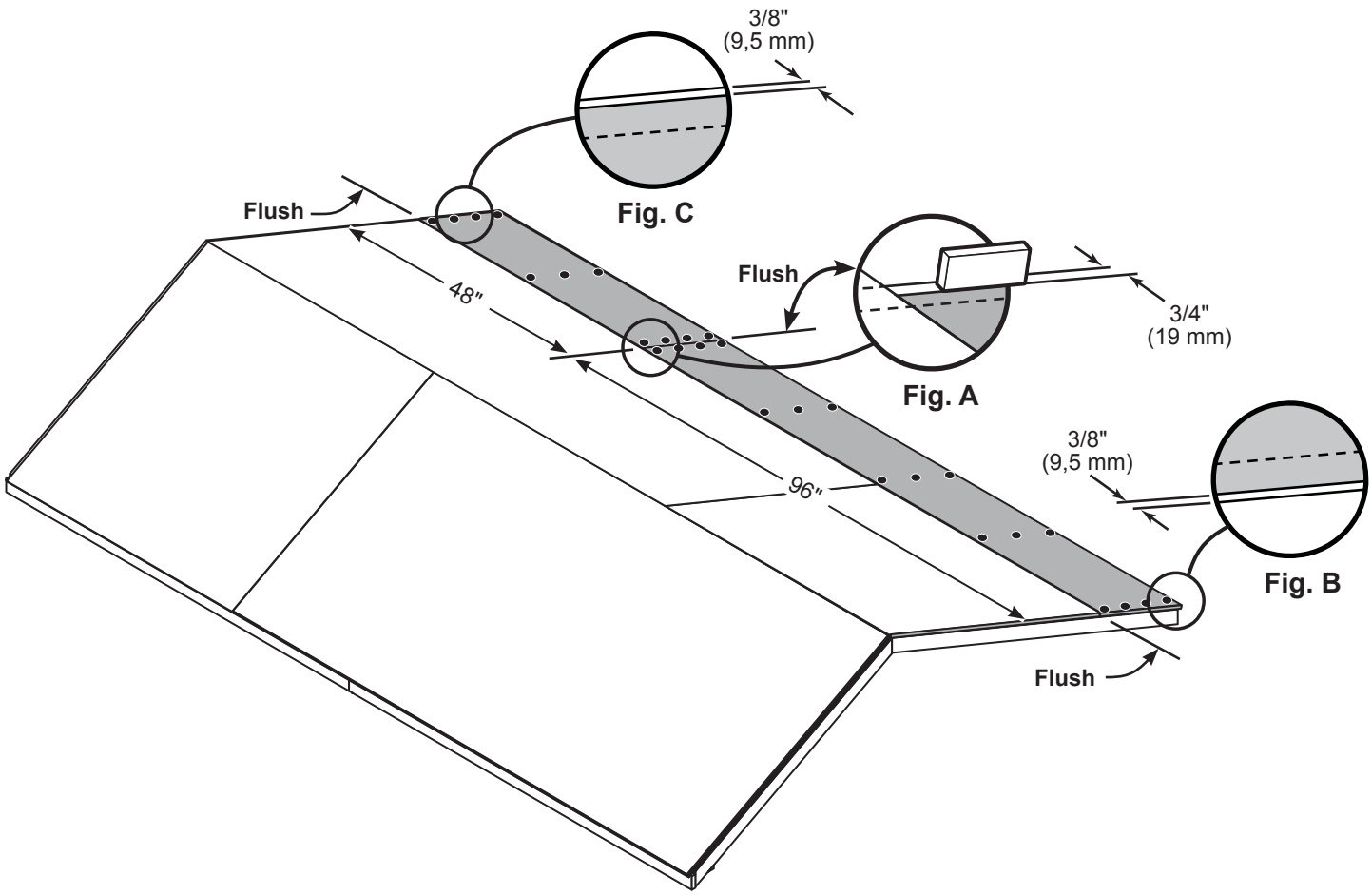

DOORS

PARTS REQUIRED:

3" (5 cm) x8

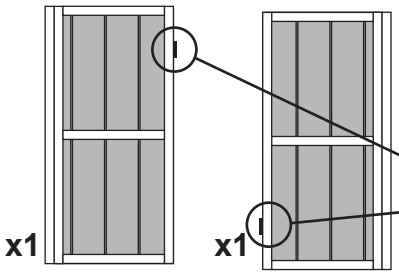

x1 Left Door

x1 Right Door

x1 **OO**
1-1/2 x 2-1/2 x 69" (3,8 x 6,3 x 175,3 cm)

x1 **OT**
2 x 3 x 68" (5 x 7,6 x 173 cm)

HINT:
Look for 3/8" SPACER attached to doors.

BEGIN

1. Orient parts as shown on flat surface. ⚠ **3/8" offset is to top. Look for red (right) and green (left) on hinge board.**

2. Attach temporary supports **OO** and **OT** with 3" screws in middle and at ends. Tighten securely.

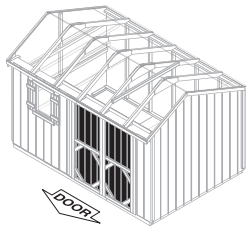

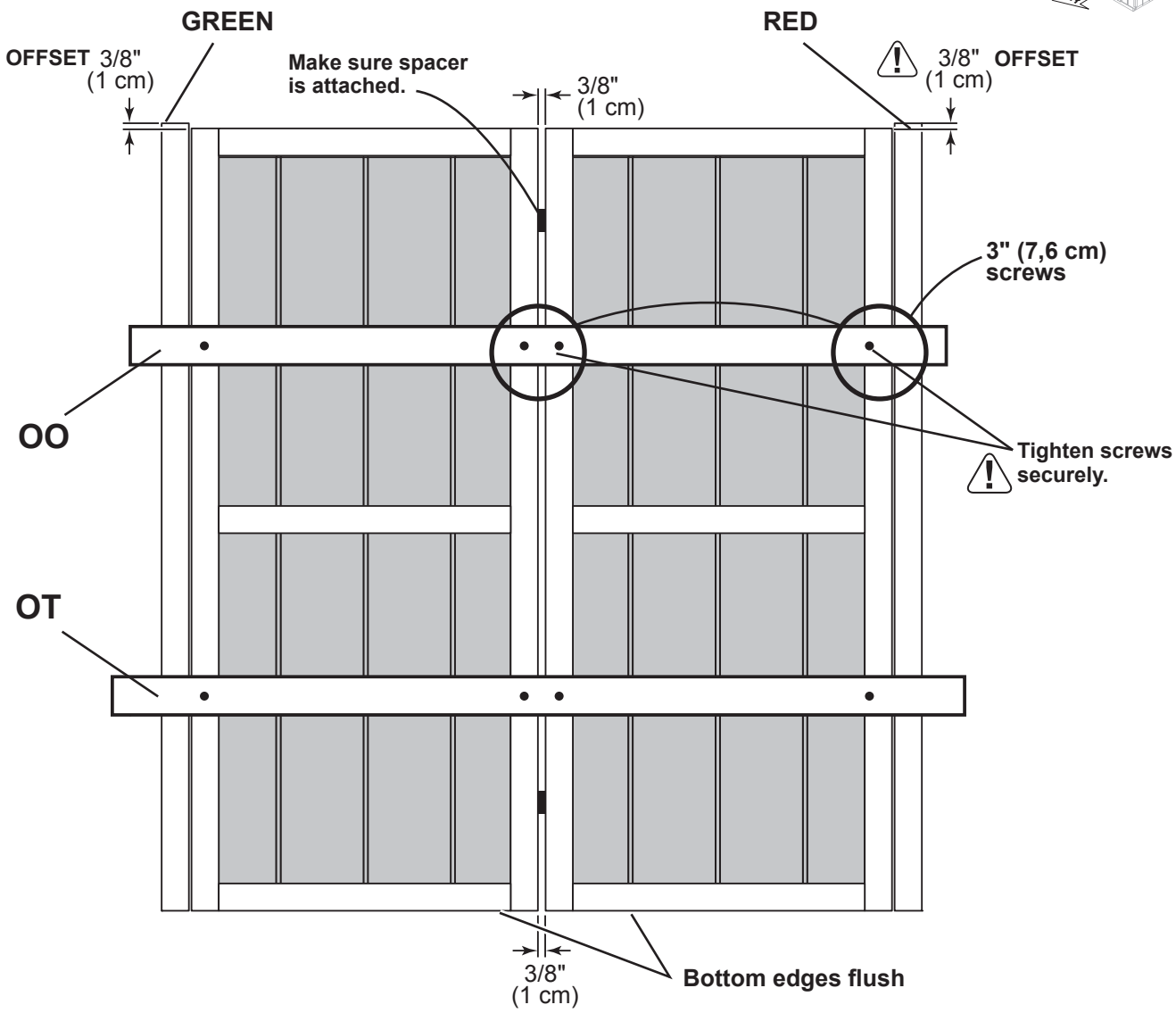

DOORS

PARTS REQUIRED:

x13 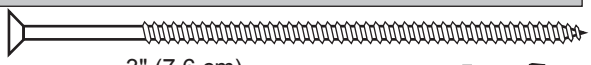
3" (7,6 cm)

x1 **OO**
1-1/2 x 2-1/2 x 69" (3,8 x 6,3 x 175,3 cm)

3 Attach temporary support **OO** as a ledger board for doors to rest on, using three 3" screws. Measure 72" down from underside of overhang **(Fig. A)**.

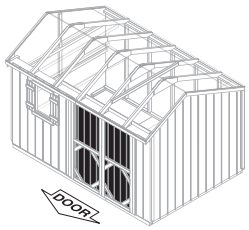

Locate center of door opening and mark.

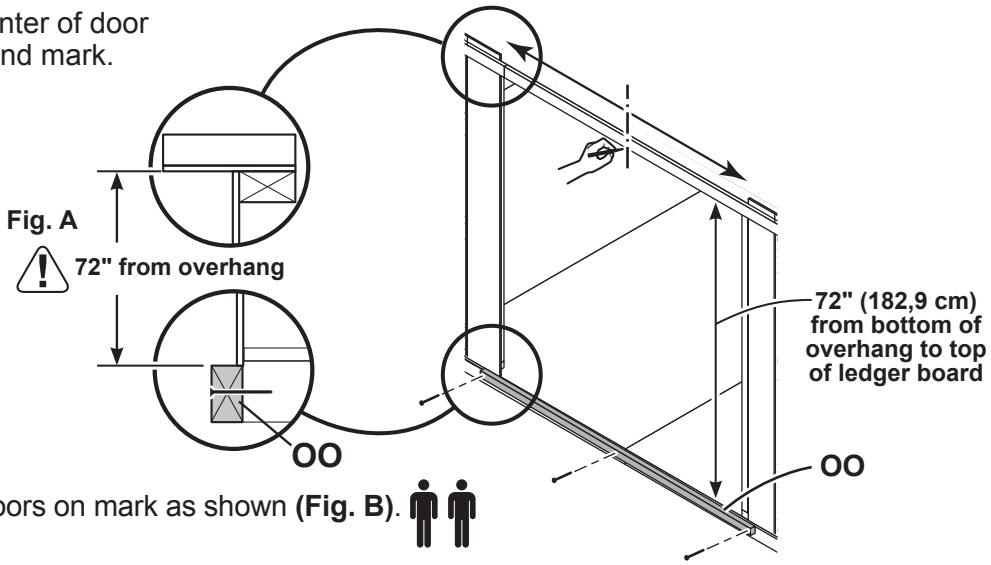

4 Center doors on mark as shown **(Fig. B)**.

⚠ **Check hinge board is flush under overhang (Fig. C).**

5 Screw hinge boards into wall supports and floor using ten 3" screws as shown.
⚠ **Make sure screws go into framing and floor (Fig. D, E)**.

6 Remove temporary supports and check doors open properly.

FINISH

7 You have finished installing your doors.

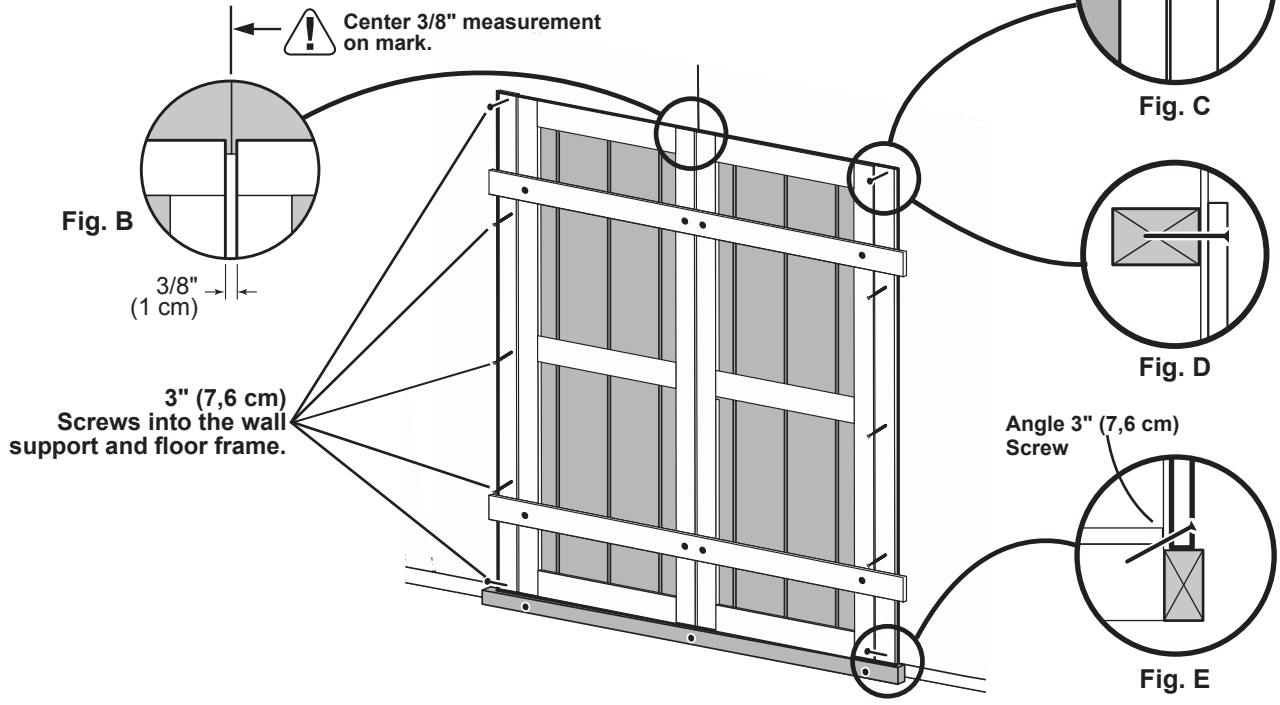

DOORS

PARTS REQUIRED:

x1 64" Metal Threshold

x11 Bagged separately/ special coating

x46 3/4" (1,9 cm)

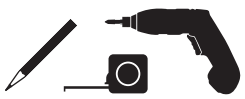

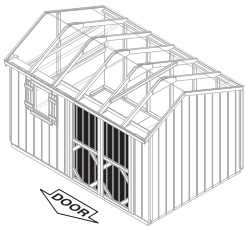

BEGIN

1. Reinforce the door trim using 3/4" screws through door panel into trim **(Fig. A)**. Locate screws as shown **(Fig. B)**. Use two screws at seams.

2. Remove 3/8" spacers from doors.

3. Center metal threshold between doors and secure using eleven 3/4" screws into floor as shown **(Fig, C)**.

FINISH

4. You have finished securing your door trim.

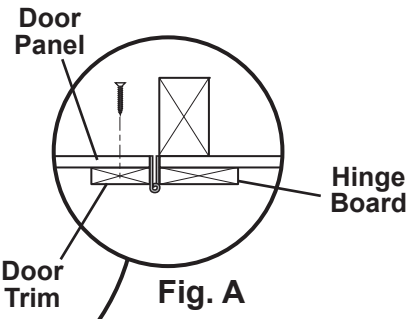

Fig. A

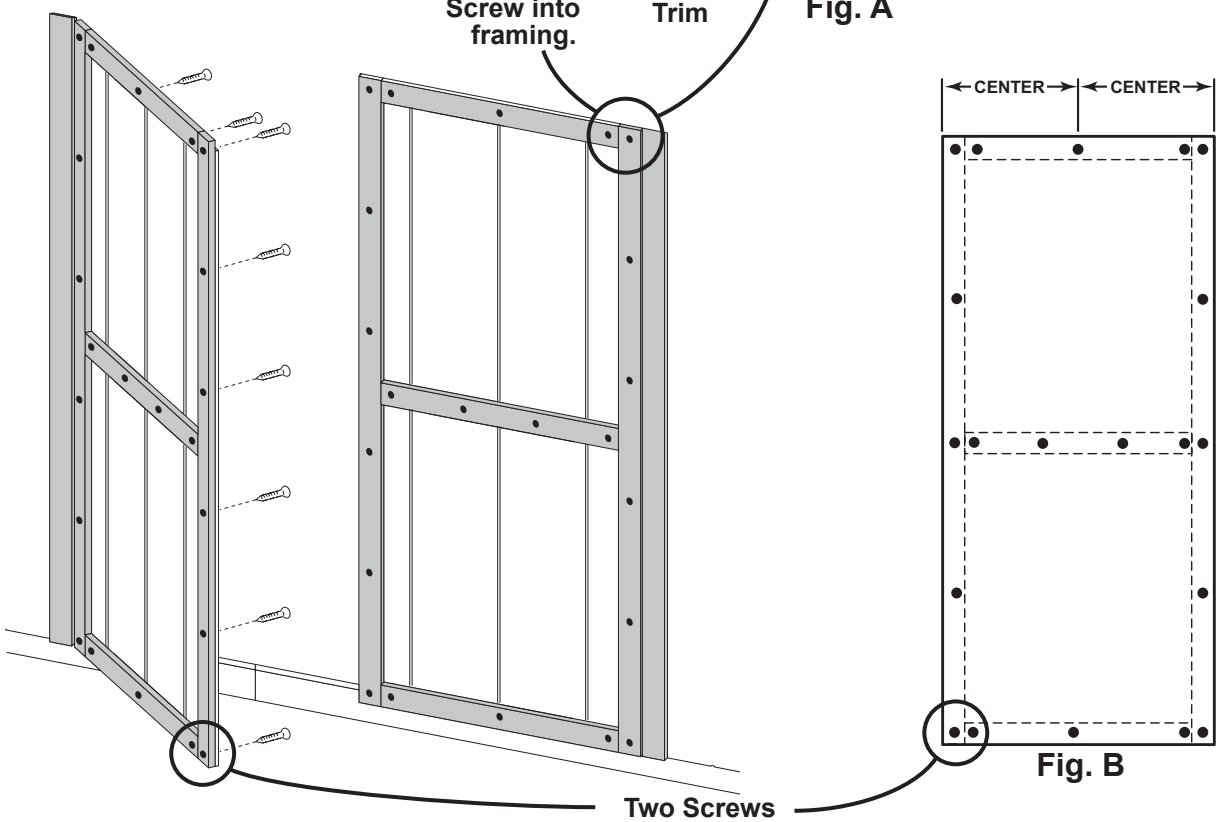

Fig. B

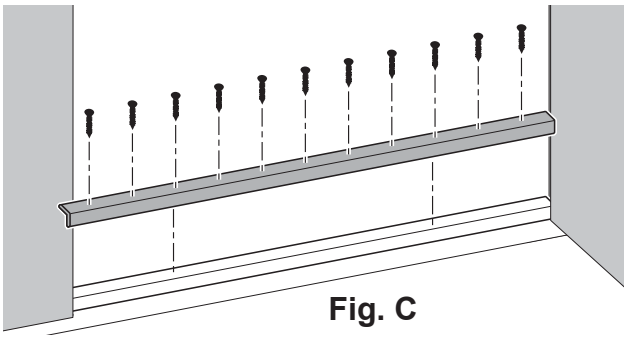

Fig. C

DOORS

PARTS REQUIRED:

x14

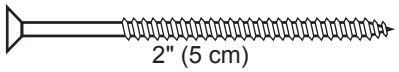

x1 **OO**
1-1/2 x 2-1/2 x 69" (3,8 x 6,3 x 175,3 cm)

BEGIN

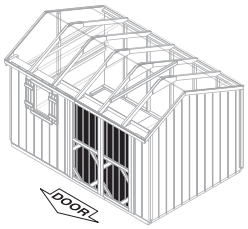

1. With left door closed, center a weatherstrip **OO** vertically on the left door in the door opening **(Fig. A**). **OO** will offset the left door 1" OUT past the door trim 1" **(Fig. B).**
2. Secure **OO** using seven 3" screws through outside trim into **OO (Fig. B)**
3. On right door center **OO** vertically in door opening **(Fig. A)**. **OO** will offset the right door 1" IN from the door trim **(Fig. C**).
4. Secure **OO** using seven 3" screws through outside trim into **OO (Fig. C**).

FINISH

5. You have finished installing your door weatherstrips.

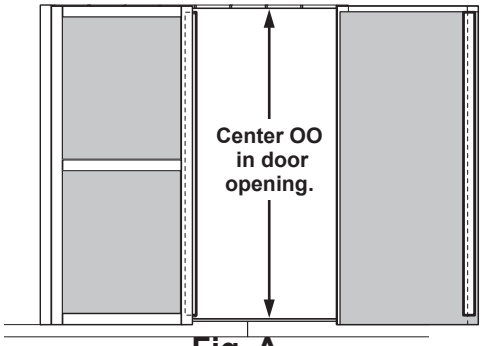

Fig. A

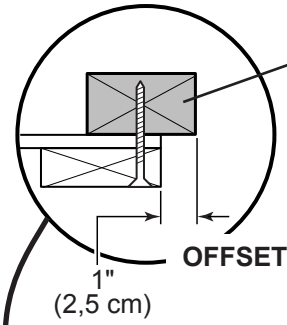

Fig. B

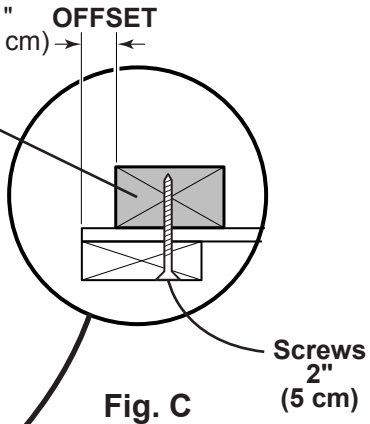

Fig. C

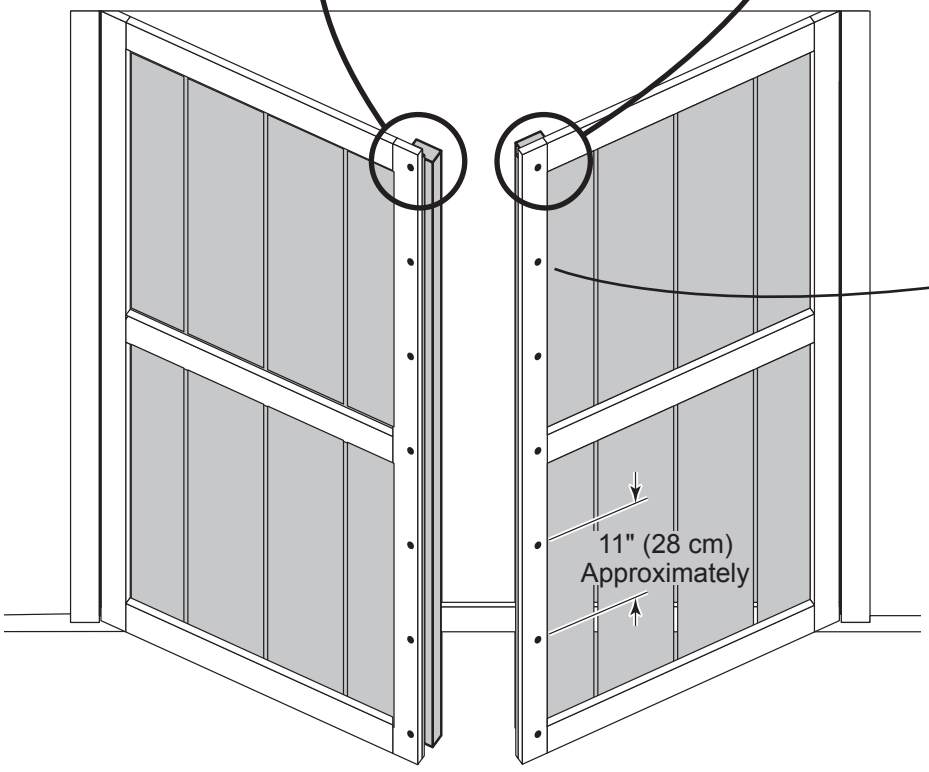

DOOR HARDWARE

PARTS REQUIRED:

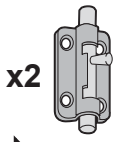

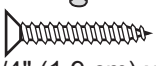

3/4" (1,9 cm) x8

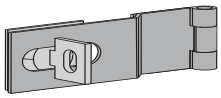

3/4" (1,9 cm) x7

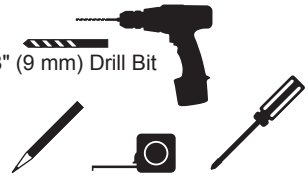

BEGIN

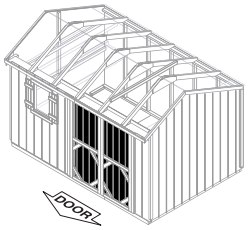

1. Mount one barrel bolt flush at top of **OO** on left door using 3/4" screws as shown **(Fig A)**.
2. Mount the second barrel bolt flush at bottom of **OO** on left door using 3/4" screws as shown **(Fig B)**.
3. With door closed mark hole locations for bolts to extend into.

HINT: Extend bolts to leave marks in wood. Tap bolts with hammer. Drill 3/8" holes deep enough for each bolt to slide into.

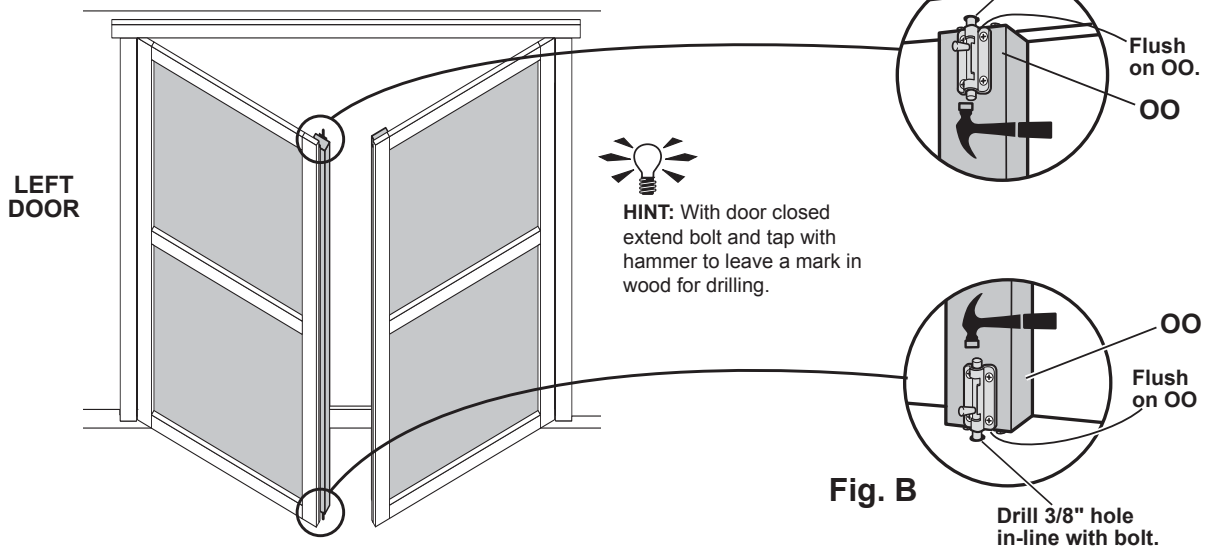

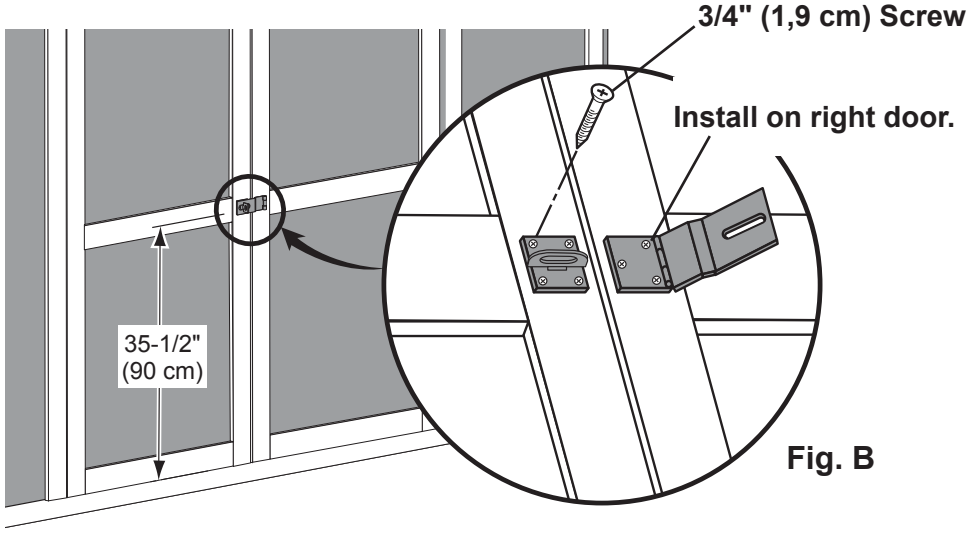

FINISH

4. Secure hasp and latch as shown using 3/4" screws. You have finished mounting your door hardware.

COLLAR TIE

PARTS REQUIRED:

x1 **OT**

2 x 3 x 68" (5 x 7,6 x 173 cm)

x6

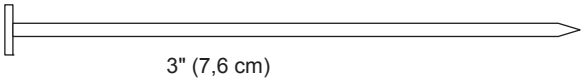

3" (7,6 cm)

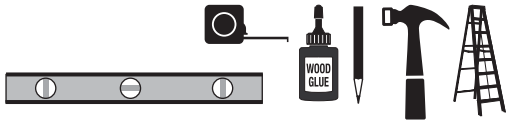

BEGIN

1 Position and level **OT** on rafter that is centered over door opening.

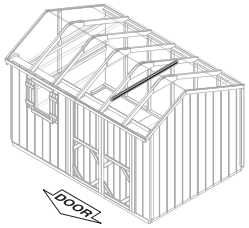

2 Glue **OT** and attach with 3" (7,6 cm) nails as shown.

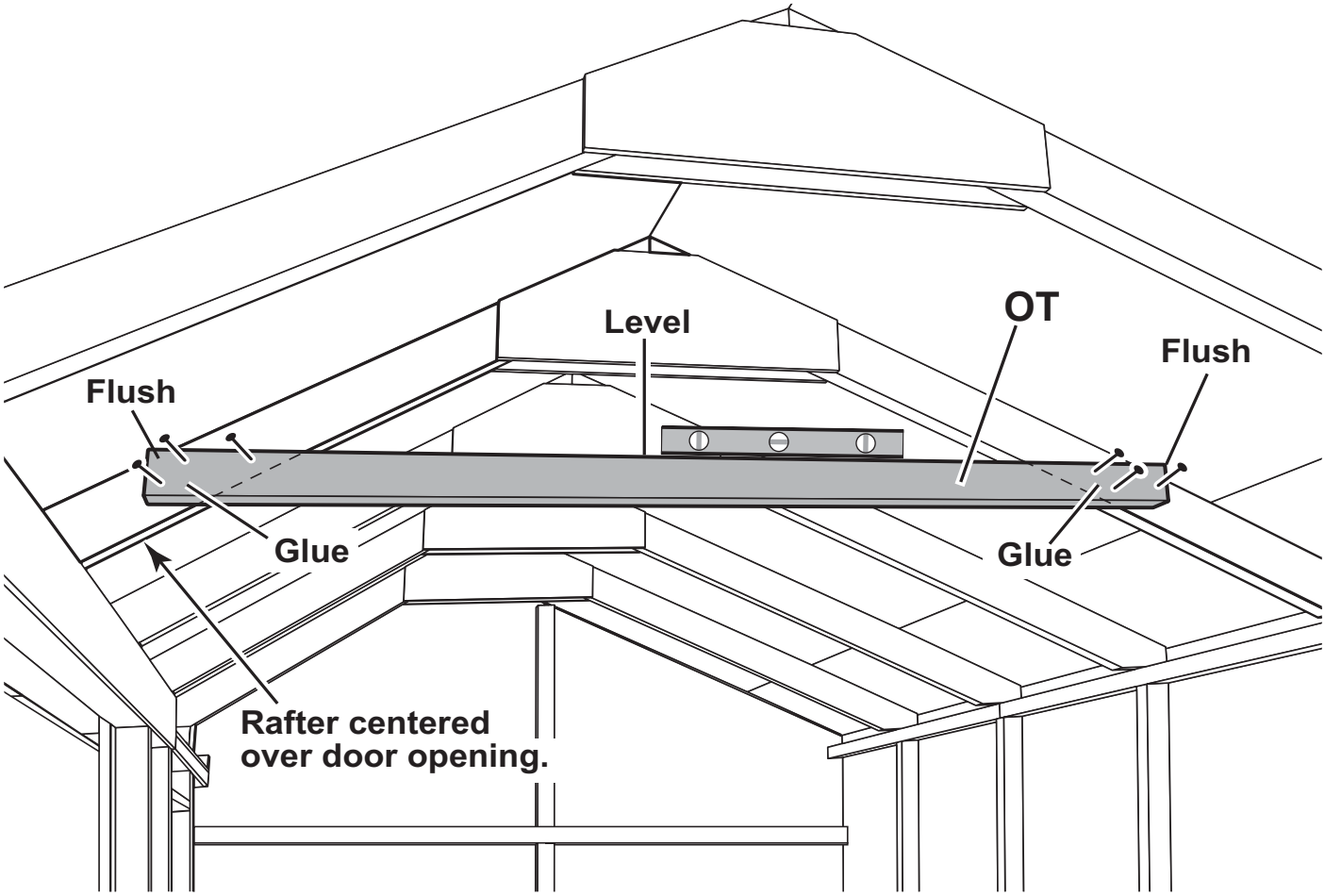

FINISH

3 You have finished installing your collar tie. Proceed to assemble and attachi your shutters.

SHUTTERS

PARTS REQUIRED:

x6 KW 5/8 x 3 x 25" (1,6 x 7,6 x 63,5 cm)

x4 KV 5/8 x 3 x 8" (1,6 x 7,6 x 20 cm)

x12 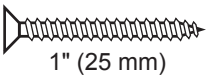
1" (25 mm)

BEGIN

1. Position parts primed side-down on floor, as shown. You will build two shutters the same.
2. Attach using 1" (25 mm) screws as shown.
3. Repeat steps to build your second shutter.

FINISH

4. You have finished building your window shutters. Proceed to install your window.

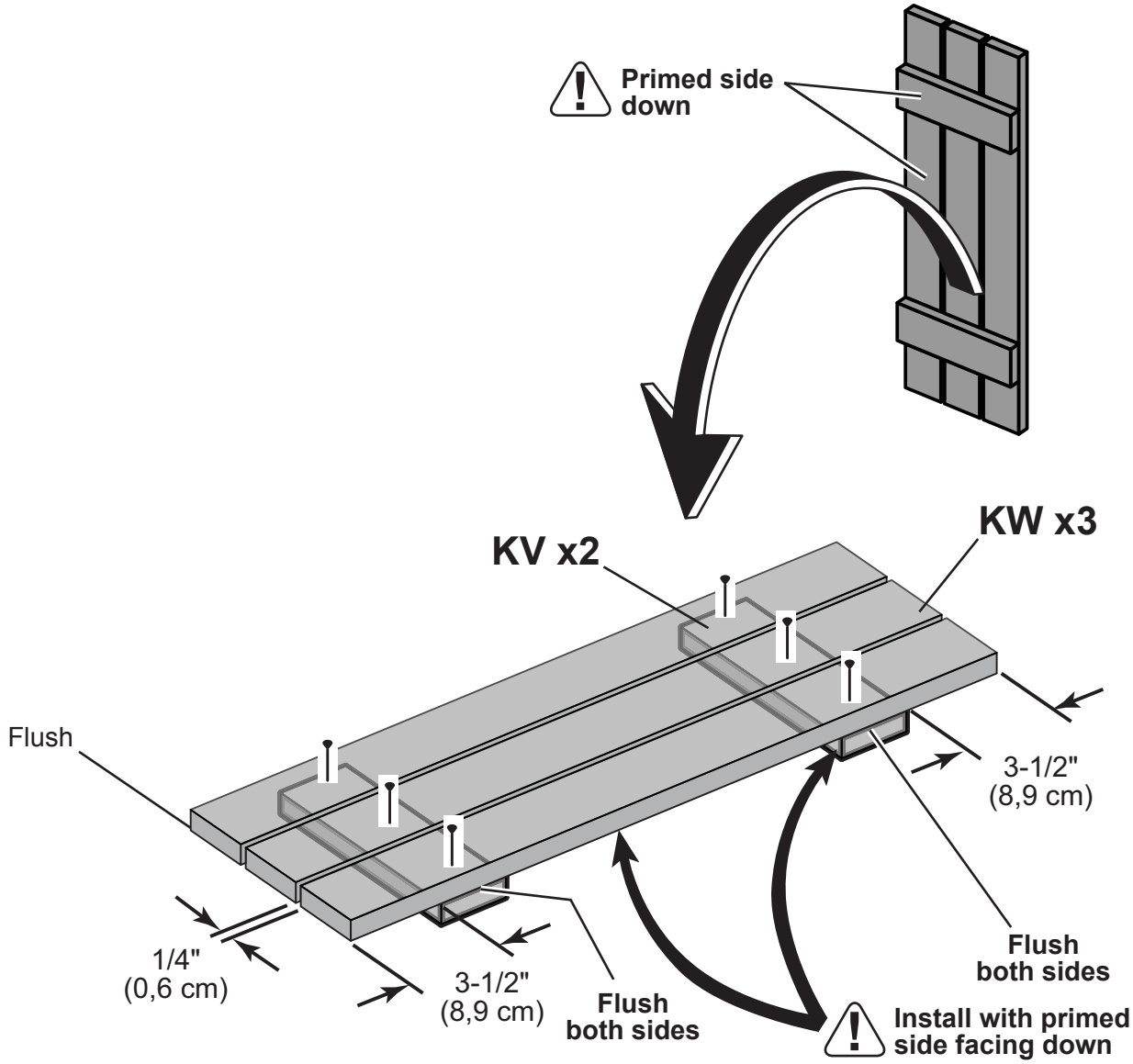

WINDOW

PARTS REQUIRED:

x1

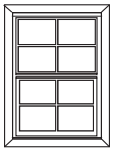

Window
23-3/4" x 16-1/2"
(63 x 42 cm)

x4

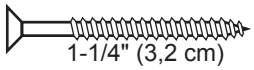

1-1/4" (3,2 cm)

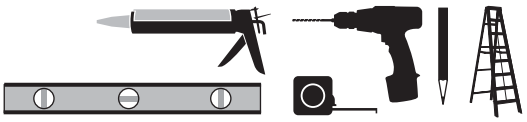

BEGIN

1 Seal window with high-quality exterior-grade caulk.

2 Attach window using four 1-1/4" (3,2 cm) screws as shown.

3 Mark center of window frame as shown.

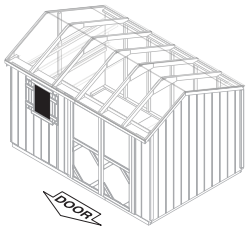

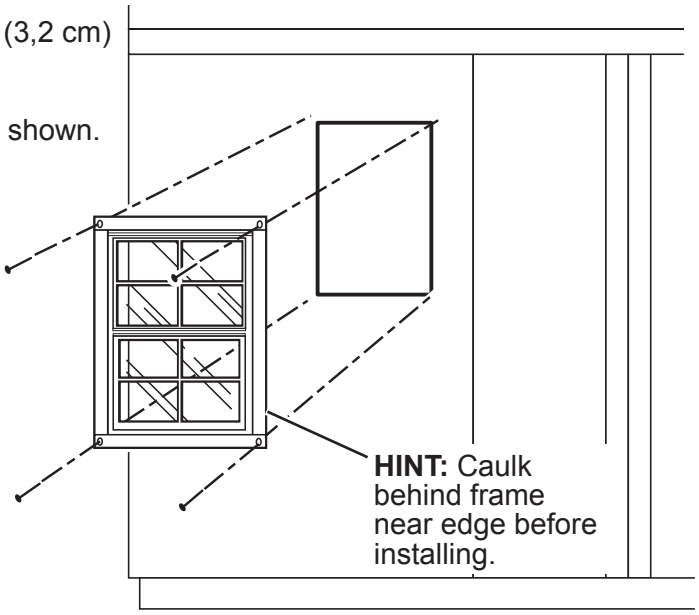

HINT: Caulk behind frame near edge before installing.

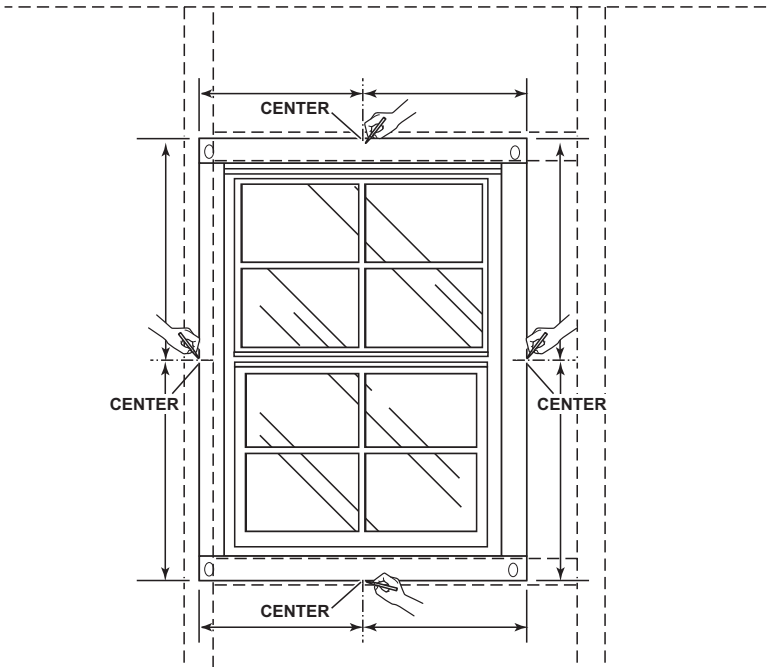

4 You have finished installing your window.

SHUTTERS / WINDOW TRIM

PARTS REQUIRED:

x2 KX
5/8 x 3 x 21-3/4" (1,6 x 7,6 x 55 cm)

x2

x20 2" (5 cm)

x6 3/4" (19 mm)

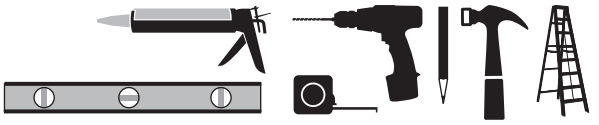

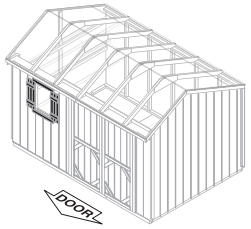

BEGIN

1 Locate one shutter centered on marks as shown.

2 First, attach shutter using a 2" finish nail at "dot". Nail into wall frame inside.

Then, from INSIDE of the shed, use three 3/4" screws to secure the shutter indicated at "**X**".

Repeat steps to attach shutter on opposite side.

3 Locate **KX** centered on mark and flush to shutters as shown. Attach using 2" finish nails. Nail into window frame inside.

FINISH

4 You have finished installing your shutters and window trim.

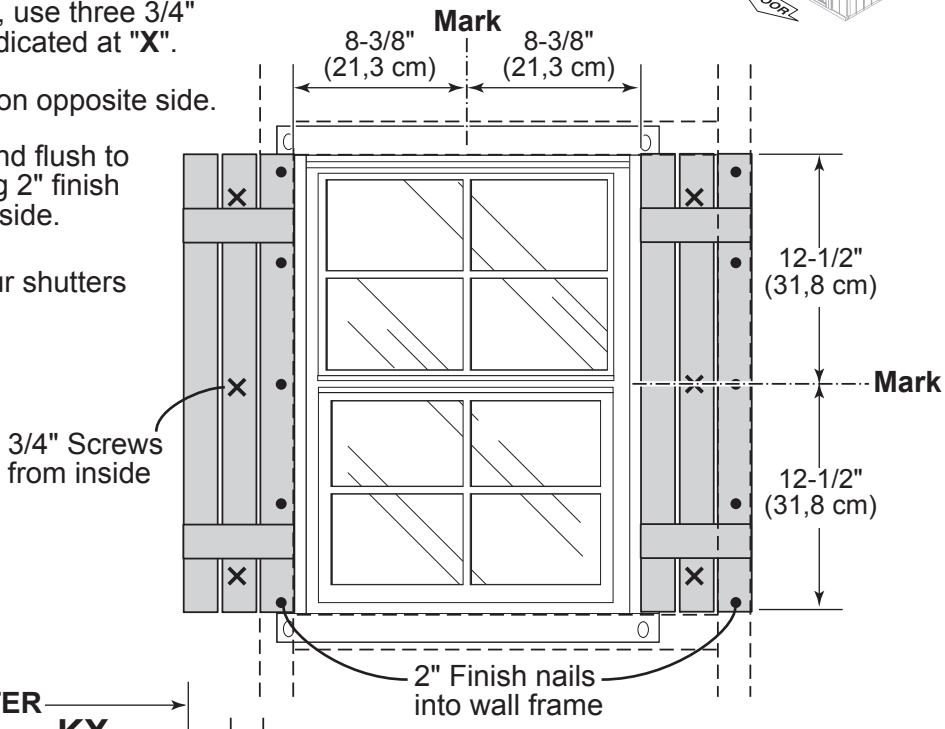

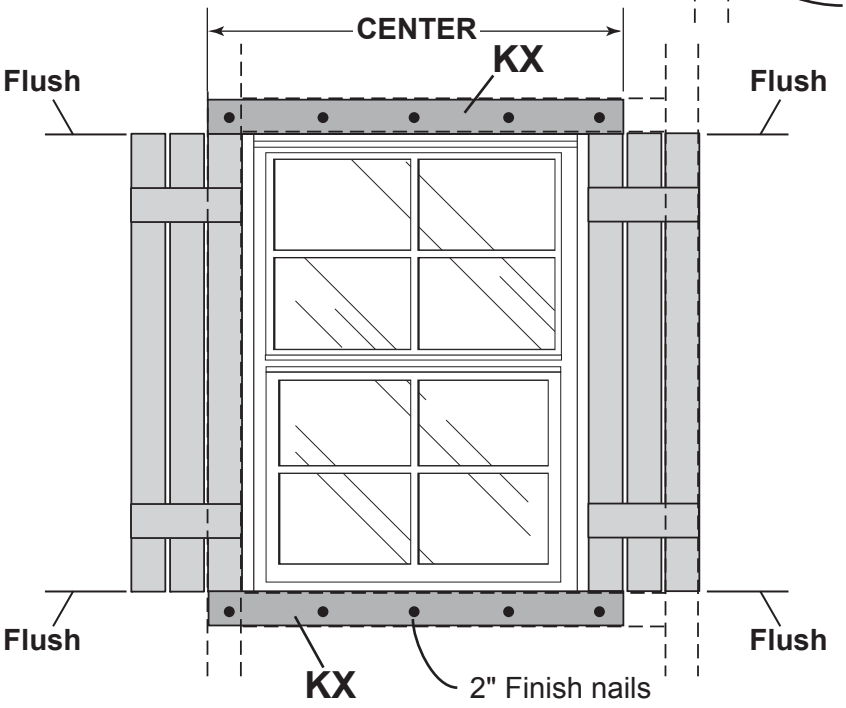

DOOR TRIM

PARTS REQUIRED:

x16 3/4" (19 mm)

x8 ZZ
5/8 x 3 x 14" (1,6 x 7,6 x 35,5 cm)

BEGIN

1 Position parts on lower pane of Door Panel, as shown.

2 Attach each using two 3/4" (19 mm) screws as shown.

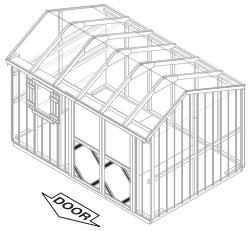

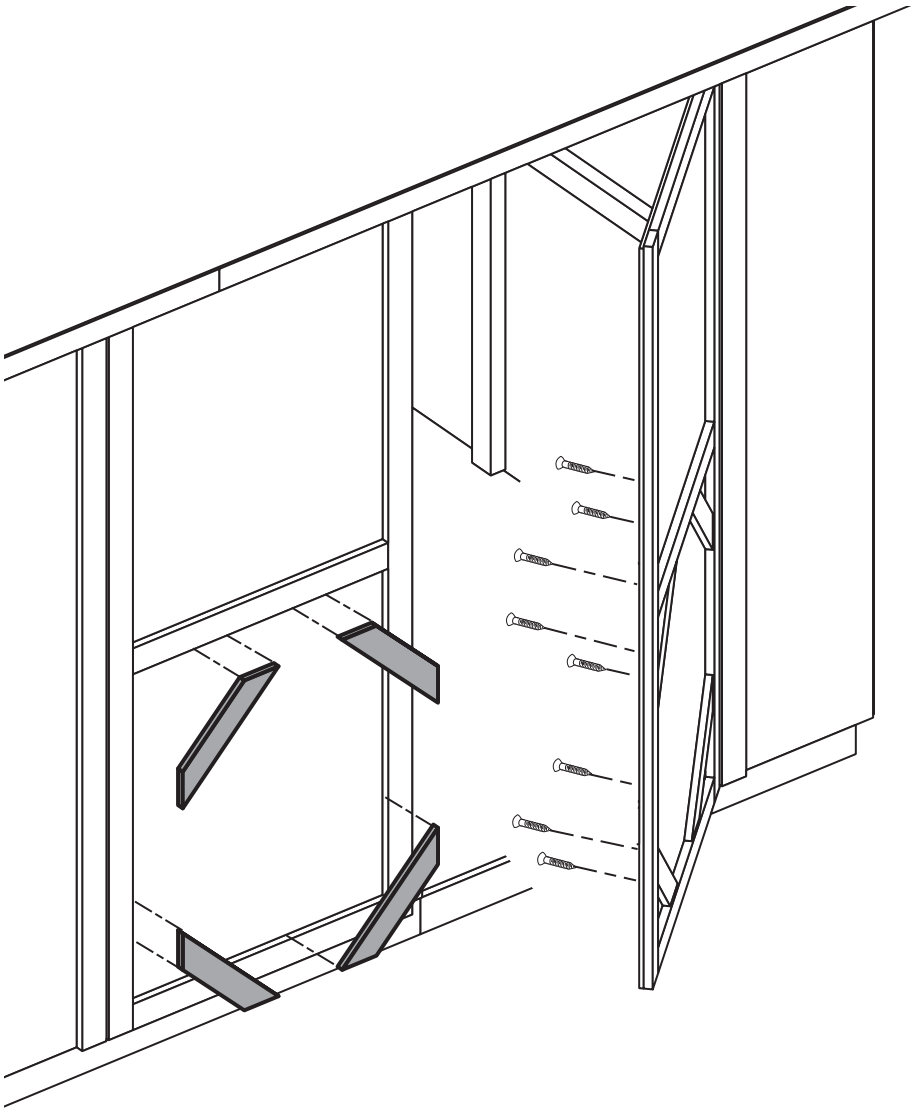

FINISH

3 You have finished installing your door trim.

PAINT & CAULK
- NOT INCLUDED -

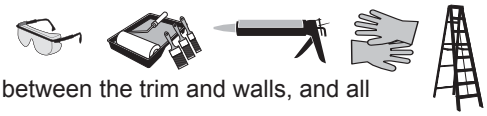

• Use acrylic latex caulk that is paintable. Caulk at all horizontal and vertical seams, between the trim and walls, and all around the door trim.

• Use a high quality exterior acrylic latex paint. When painting your building, there are a few key areas that can be easily overlooked that must be painted:
  • Bottom edge of all siding and trim
  • Inside of doors and all 4 edges

Note:
Prime all un-primed exterior wood before painting.
(Follow directions provided by manufacturer.)

ROOF FELT
- NOT INCLUDED -

• Install felt flush to all roof edges overlapping 3". Use minimal amount of roofing nails to hold in place.

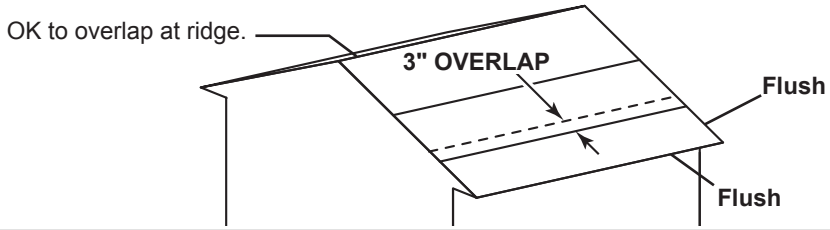

DRIP EDGE
- NOT INCLUDED -

• Install drip edge over roof felt on gable side and under roof felt on eave side **(Fig. A)**.
• Do not use nails on side of drip edge that hangs over side of building.
• Only nail top of drip edge as shown.

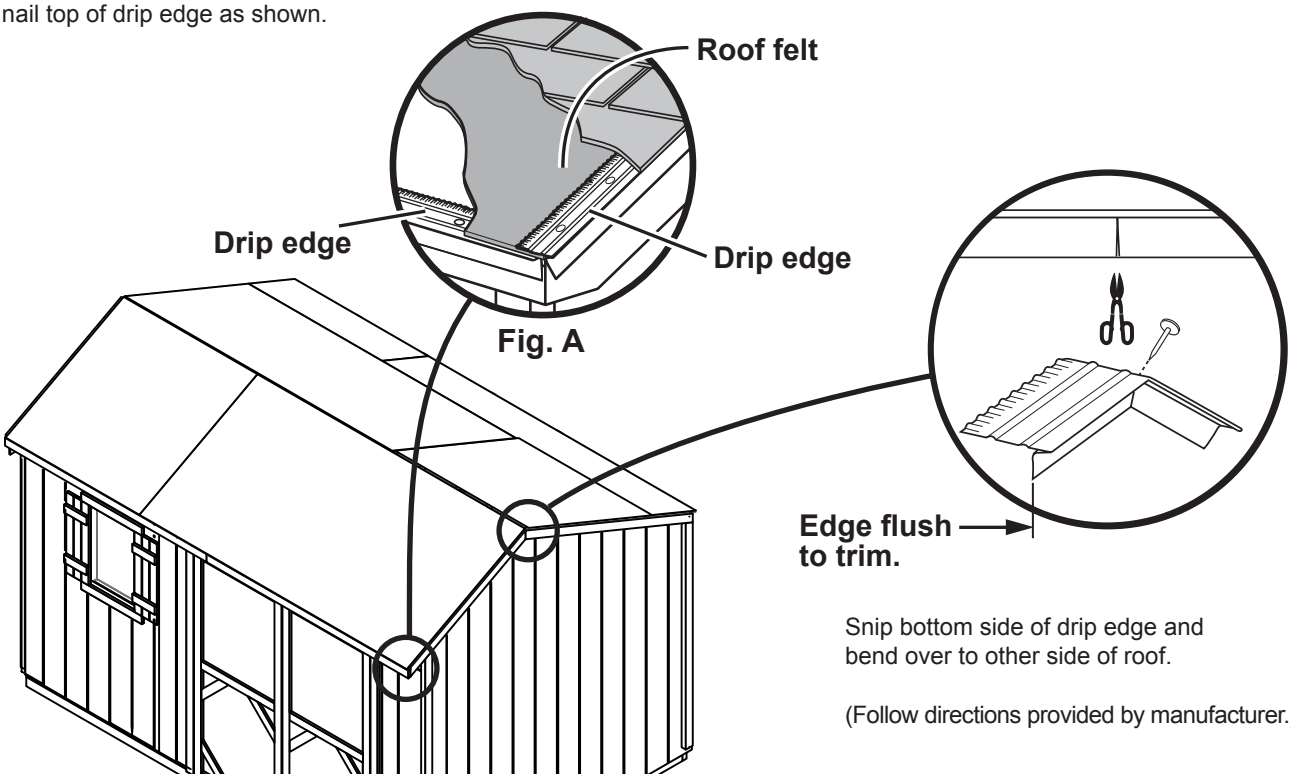

Snip bottom side of drip edge and bend over to other side of roof.

(Follow directions provided by manufacturer.)

SHINGLES
- NOT INCLUDED -

• Follow directions provided by manufacturer and these instructions.

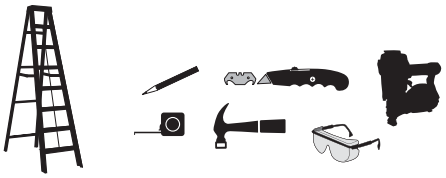

⚠ Familiarize yourself with a 3-Tab Shingle.

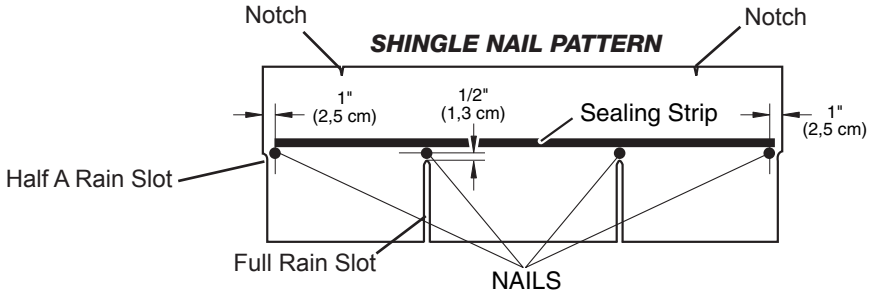

⚠ NEVER DRIVE FASTENERS INTO OR ABOVE SEALING STRIPS.

✓BEGIN

1 Install first starter row upside down and color up with a 1" overhang at back and bottom of roof panel. Use (4) nails per shingle.
Starter row must be straight and level all the way across with lower edge of roof deck.
NOTE: If you have installed drip edge install shingles flush to drip edge.

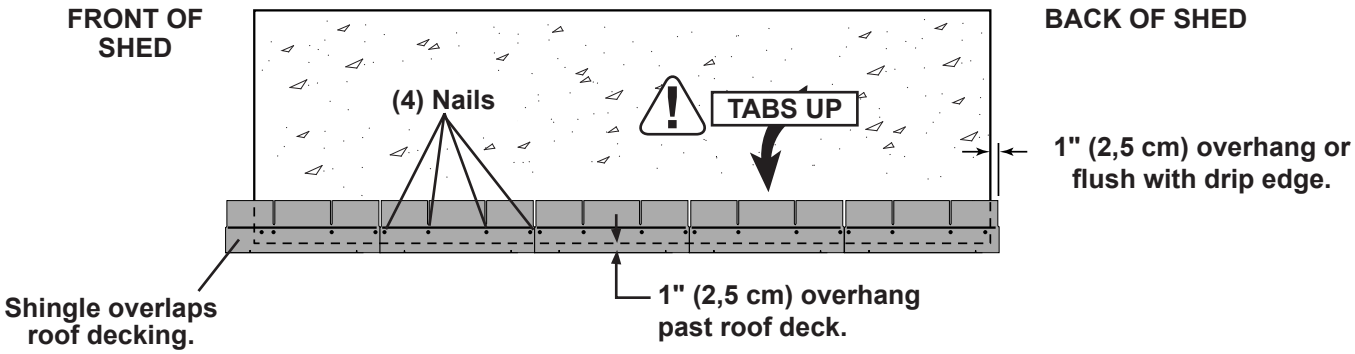

2 Beginning at front of shed, install first row of shingles with notch at 1" past roof edge or flush with drip edge.

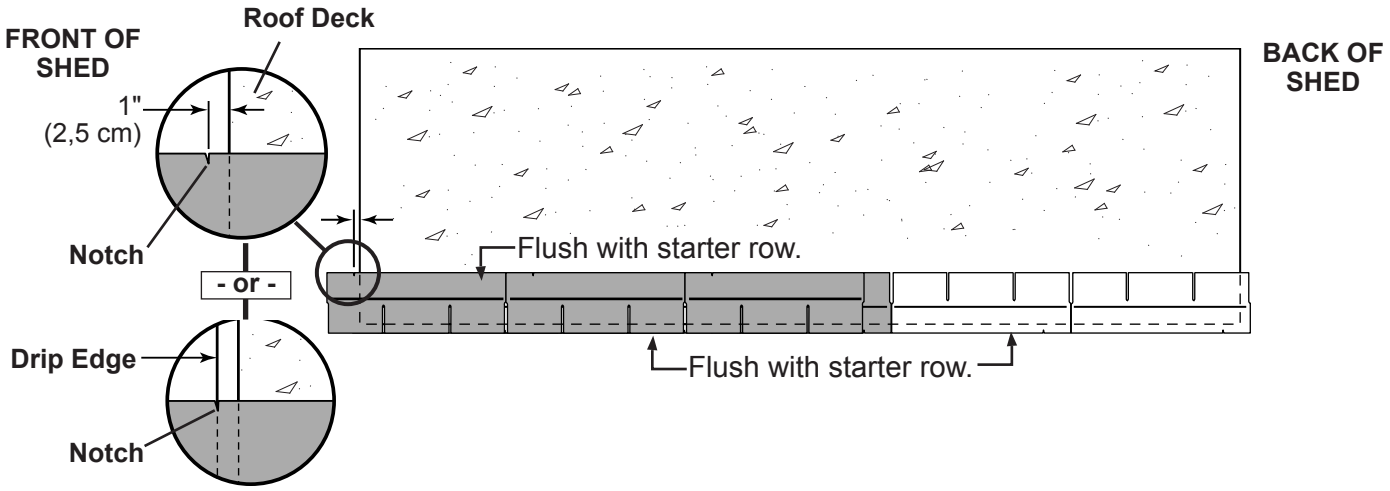

3 Install second row of shingles flush at top of first row's rain slots. Ensure 1" overhang or flush to drip edge at front, stagger each row.

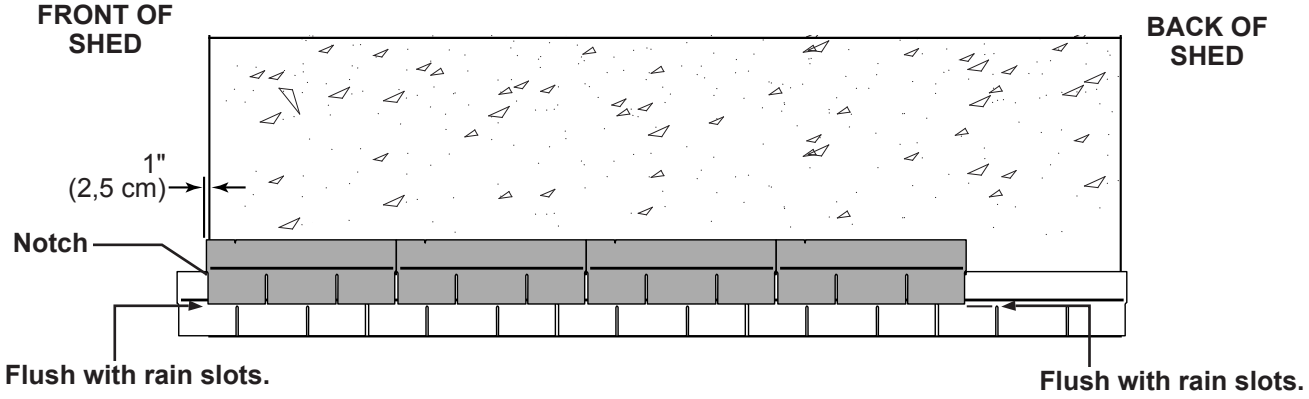

4 Continue installing rows of shingles by staggering at front.

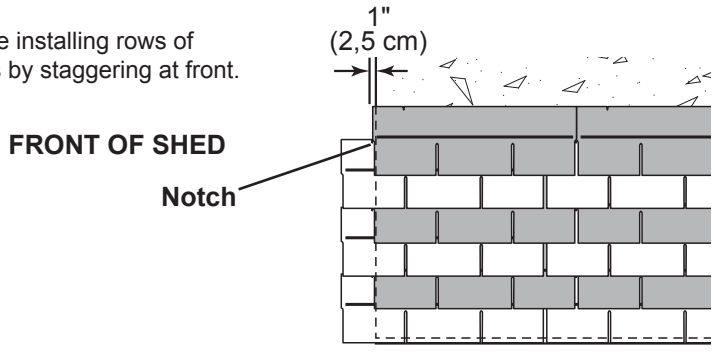

SHINGLES
continued...

5 Continue installing rows of shingles to the peak. At the peak make sure there is a maximum of 5" or less to the rain slot, as shown below. If shingles overlap at ridge cut to peak with a utility knife.

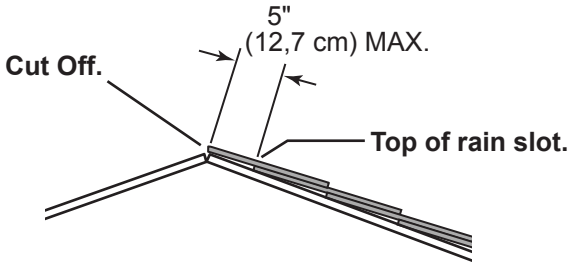

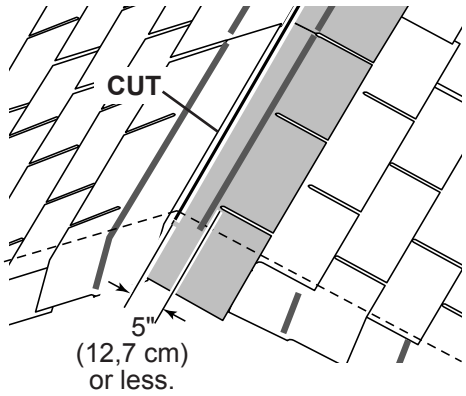

⚠ **• If more than 5" to rain slot you must install another row of shingles.**

6 Repeat steps 1 - 5 to shingle the opposite side of your roof. Trim shingles at ridge.

7 Once both sides are shingled you need to trim ends. Strike a chalk line 1" from edge.

8 Using your shingle hooked blade carefully cut shingles along chalk line.

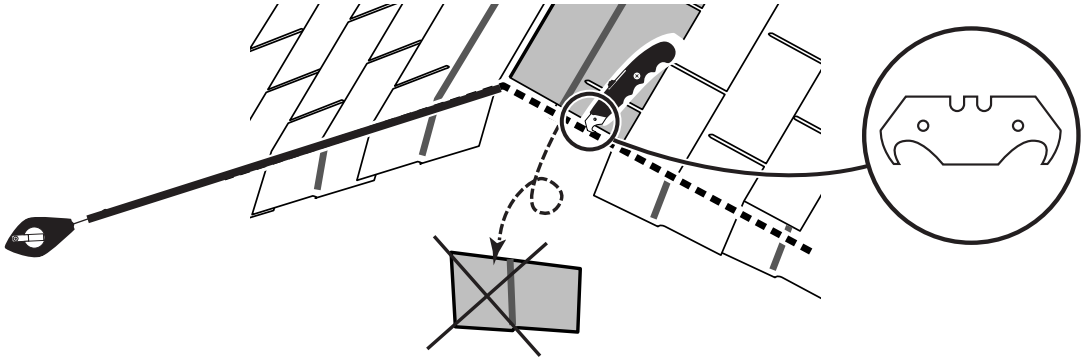

FINISH

9 You have finished shingling your roof. Proceed to capping the ridge.

SHINGLES - RIDGE CAP

• You will finish off the top of the roof with a ridge cap made from shingles.

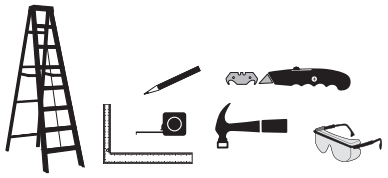

BEGIN

1 Cut shingles into THREE pieces. **Hint:** Use cut-off pieces first.

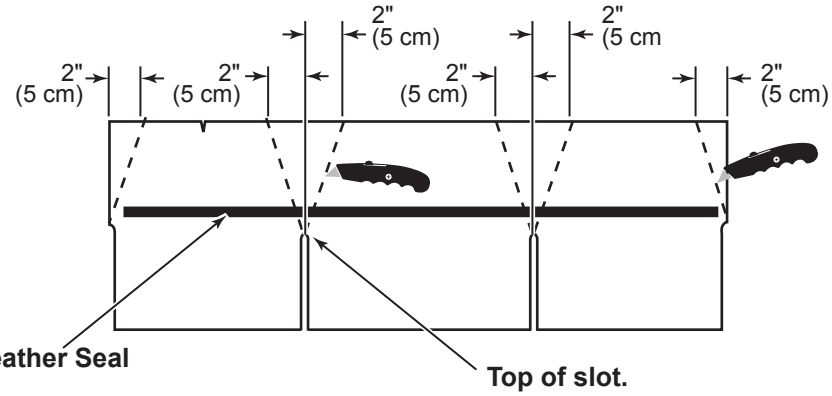

Score shingle, then snap-off angled cut.

Note: • You will need about 36 cut pieces.

2 Install first ridge cap flush to shingles at front, as shown.

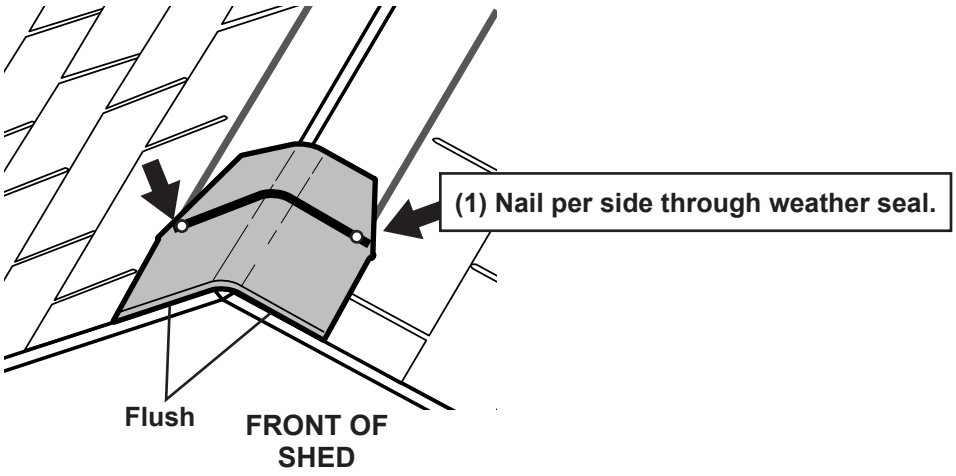

3 Install second ridge cap 5" back, as shown.

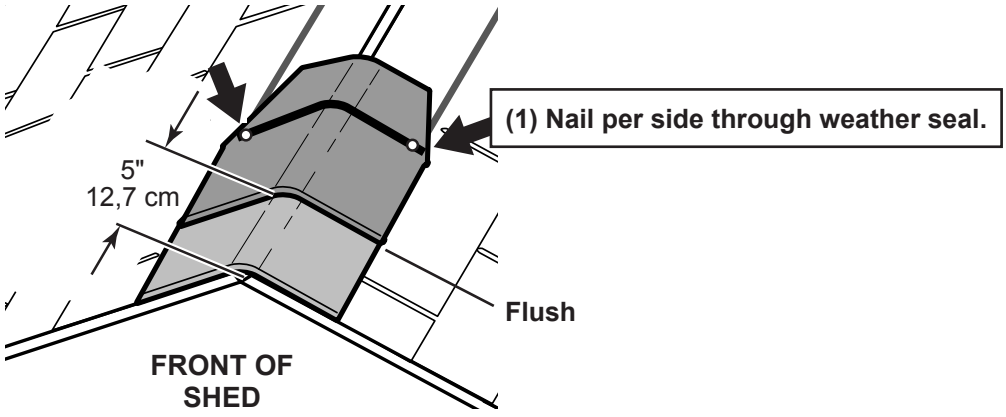

SHINGLES - RIDGE CAP
continued...

4 Continue installing ridge cap to back of roof.

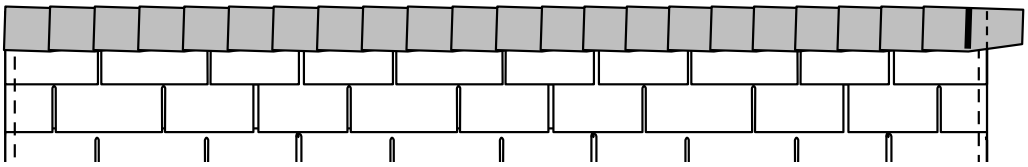

5 Make sure there is 4" between the shingle-color and edge of shingles.

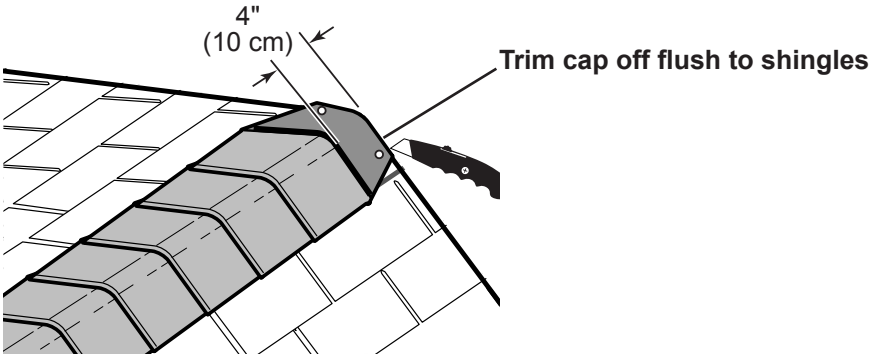

6 When you have 4" minimum of shingle color cut one piece to cap your roof.

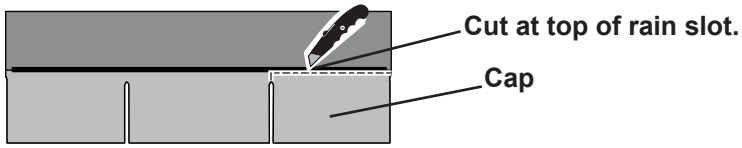

7 Install flush to shingles.

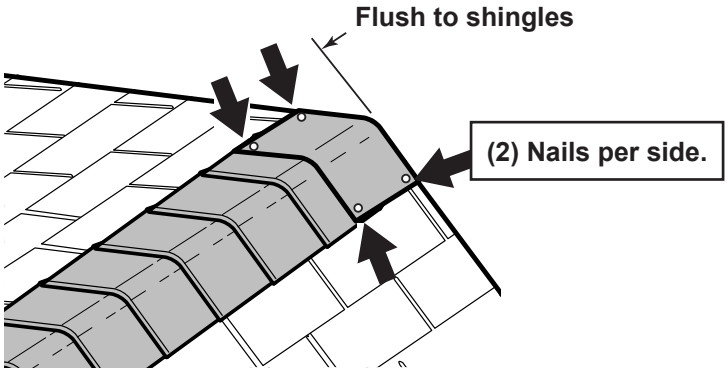

FINISH

8 You have finished your ridge cap.

WARRANTY REGISTRATION

Please complete your warranty registration to properly validate your warranty.

Register your product online at:www.OnlineWarranty.net.

LIMITED CONDITIONAL WARRANTY*

Backyard Storage Solutions, LLC warrants the following:

1. Every product is warranted from defects in workmanship and manufacturing for 1 year.
2. All accessories, hardware and metal components are warranted for 2 years.
3. All Oriented Strand Board (OSB) is warranted for 2 years
4. Siding and Trim is warranted for:
   10 years: Value Series / Solar Shed
   12 years: Classic Series / Architectural Series
   15 years: Big Buildings
5. Solar Shed windows are warranted for 1 year.
6. Cedar lumber is warranted for 15 years.
7. Preserved Pine is warranted for 10 years.

Backyard Storage Solutions, LLC will repair, replace or pay for the affected part. In no event shall Backyard Storage Solutions, LLC pay the cost of labor or installation or any other costs related thereto. All warranties are from date of purchase. If a cash refund is paid on an affected part, it will be prorated from the date of purchase.

CONDITIONS

The warranty is effective only when:

1. The unit has been erected in accordance with the assembly instructions.
2. The unit has been properly shingled and painted or stained and reasonably and regularly maintained thereafter.
3. The failure occurs when the unit is owned by the original purchaser.
4. Backyard Storage Solutions, LLC has received the warranty registration card within thirty (30) days of purchase and notification of the failure in writing within the warranty period specified above.
5. Backyard Storage Solutions, LLC has had reasonable opportunity during the sixty (60) days following receipt of notification to inspect and verify the failure prior to commencement of any repair work.

REQUIREMENTS

Storage Buildings

To validate your warranty, it is necessary to properly maintain your Backyard Storage Solutions, LLC unit; shingle the roof and paint or solid-colored stain the siding using quality, 100% acrylic latex exterior product with a minimum of two (2) coats within thirty (30) days of assembly; caulk above all doors and all horizontal and vertical trim boards; paint and seal all exposed edges, sides and faces of siding/trim and OSB siding to include all exterior walls and all sides and all edges of doors.

Gazebos & Pergolas

To validate your warranty, it is necessary to properly maintain your Backyard Storage Solutions, LLC unit. This includes treating all of the exposed cedar and pine surfaces on your gazebo or pergola structure with an exterior grade wood preservative, an exterior oil-based semi-transparent stain, an acrylic latex exterior paint or an acrylic latex solid color exterior stain within 30 days of assembly and as needed thereafter to maintain your warranty.

Keep vegetation trimmed away from building and make sure siding panels and trim do not come in contact with masonry or cement. The minimum ground clearance for siding must be one half inch (½ inch) from concrete slab or two and one half inches (2 ½") from the ground when building is erected or constructed on a treated wood floor kit. Water from sprinklers must be kept off unit. In no event will Backyard Storage Solutions, LLC be responsible for any indirect, incidental, consequential or special damages nor for failure(s) that are caused by events, acts or omissions beyond our control including, but not limited to, misuse or improper assembly, improper maintenance (which eventually leads to rot or decay) and acts of God. Backyard Storage Solutions, LLC will not be held responsible for any labor costs incurred to construct your unit.

This warranty gives you certain specific rights that vary from state to state.

CLAIM PROCEDURE

To make a claim under this warranty, you can either call 1-888-827-9056 or email: customerservice@backyardproducts.com. Please have ready the information below when you call or include the information in your email:

1. The model and size of the product.
2. A list of the part(s) for which the claim is made.
3. Proof of purchase of the Backyard Storage Solutions, LLC item, as shown on the original invoice.
4. Run code: found on exterior product label or assembly instructions enclosed in the product package.

All other inquiries can be mailed to:

Backyard Storage Solutions, LLC
Attn: Customer Service
1000 Ternes
Monroe, MI 48162

***WARRANTY TERMS MAY VARY OUTSIDE THE U.S.A.**

IMPORTANT: This is your warranty certificate.